EURONORM
DRIVE SYSTEMS

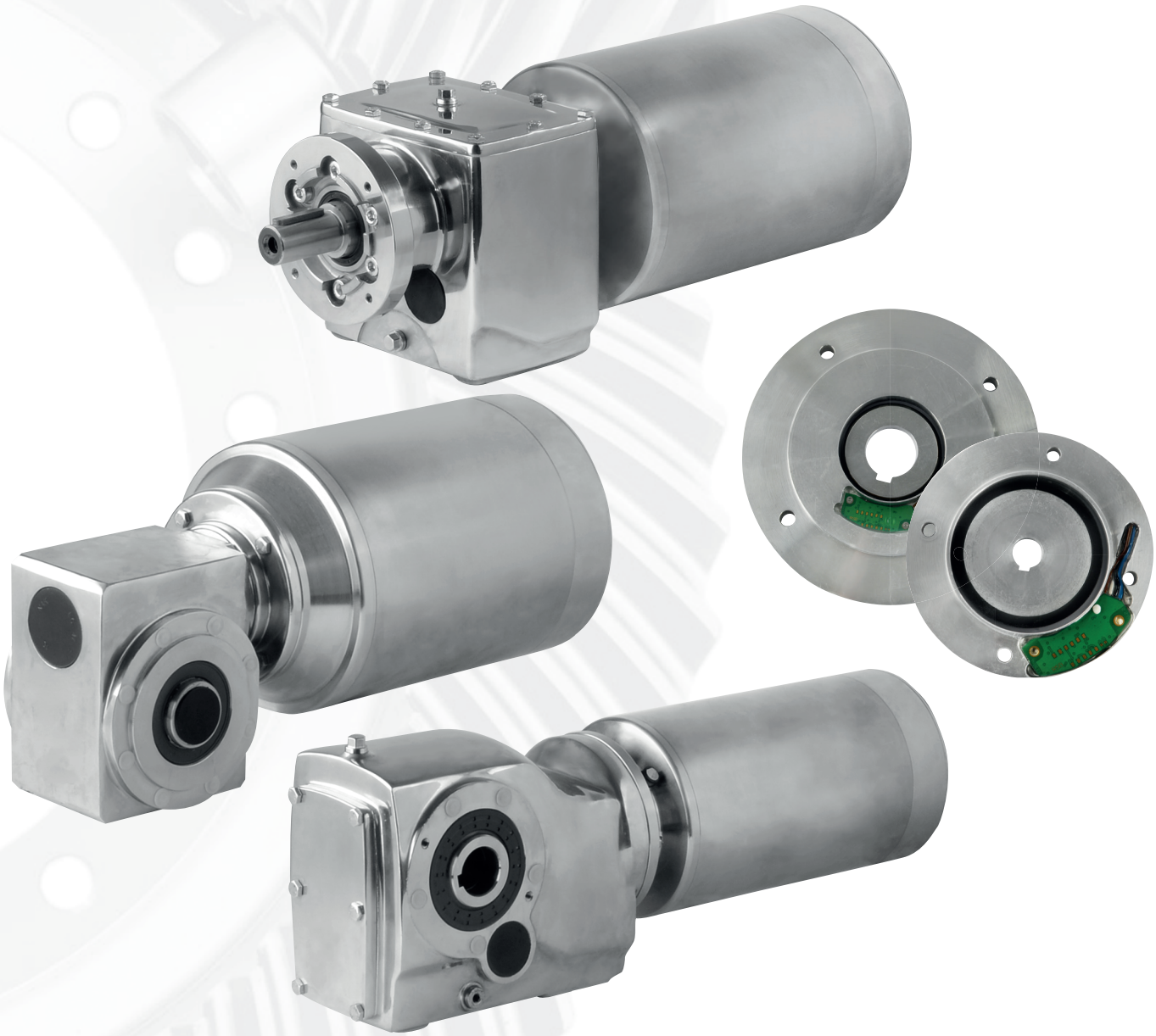

RVS AANDRIJVINGEN / CRES DRIVES

1. Inleiding

Vooral in de voedingsmiddelenindustrie is de selectie van een hygiënezone passende aandrijvingen van groot belang. Verkeerde aandrijfkeuzes of ongeschikte materialen kunnen voor ernstige problemen zorgen.

Zowel het gebruikelijke schoonmaak-regime met schoonmaakmiddelen als de langdurige inzet bij continu lage of hoge temperaturen stellen speciale eisen aan de aandrijvingen.

Het Euronorm RVS programma is speciaal ontworpen voor toepassing in veeleisende werkomgevingen. Het programma voldoet aan de HACCP en EHEDG regelgeving tegen de beste tegen de laagste totale kosten.

Door het zorgvuldige ontwerp (Hygienic Design), de keuze van materialen en smeermiddelen maakt het Euronorm RVS programma het leven van constructeurs, schoonmakers en onderhoudsmonteurs een stuk eenvoudiger.

1. Introduction

Particularly in the food and beverage industry the selection of drive components that suit the hygiene zones is of the greatest importance. The wrong choice or unsuitable materials can cause serious problems.

Not just for the food and beverage industry specific cleaning regimes and cleaning agents, also the prolonged use at low or continuous high temperatures puts special demands on these drives.

The Euronorm CRES programme is specially designed for use in these demanding working conditions, and to durably comply with the demands of the HACCP and EHEDG regulations, against the best total cost of ownership.

The careful Hygienic Design and selection of materials and lubricants makes the lives of designers, cleaners and service engineers a lot simpler.

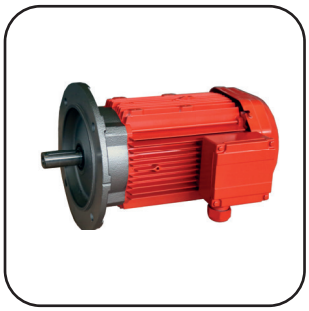

Inhoud

1 Inleiding van het RVS aandrijfprogramma 3
2 RVS motorreductoren 4
2.1 JRESR rechte reductoren 4
2.2 JRESK haakse kegeltandwielreductoren 15
2.3 JRESSD wormwielreductoren 24
2.4 Smering 29
2.5 Montageposities 31
3 EURONORM RVS motoren 35
4 Encoders 45

1 Introduction of the stainless steel drive program 3
2 Stainless steel motor gearboxes 4
2.1 JRESR straight reducers 4
2.2 JRESSD worm gear reducer 15
2.3 JRESSD worm gear reducers 24
2.4 Lubrication 30
2.5 Mounting positions 31
3 EURONORM CRES motors 36
4 Encoders 45

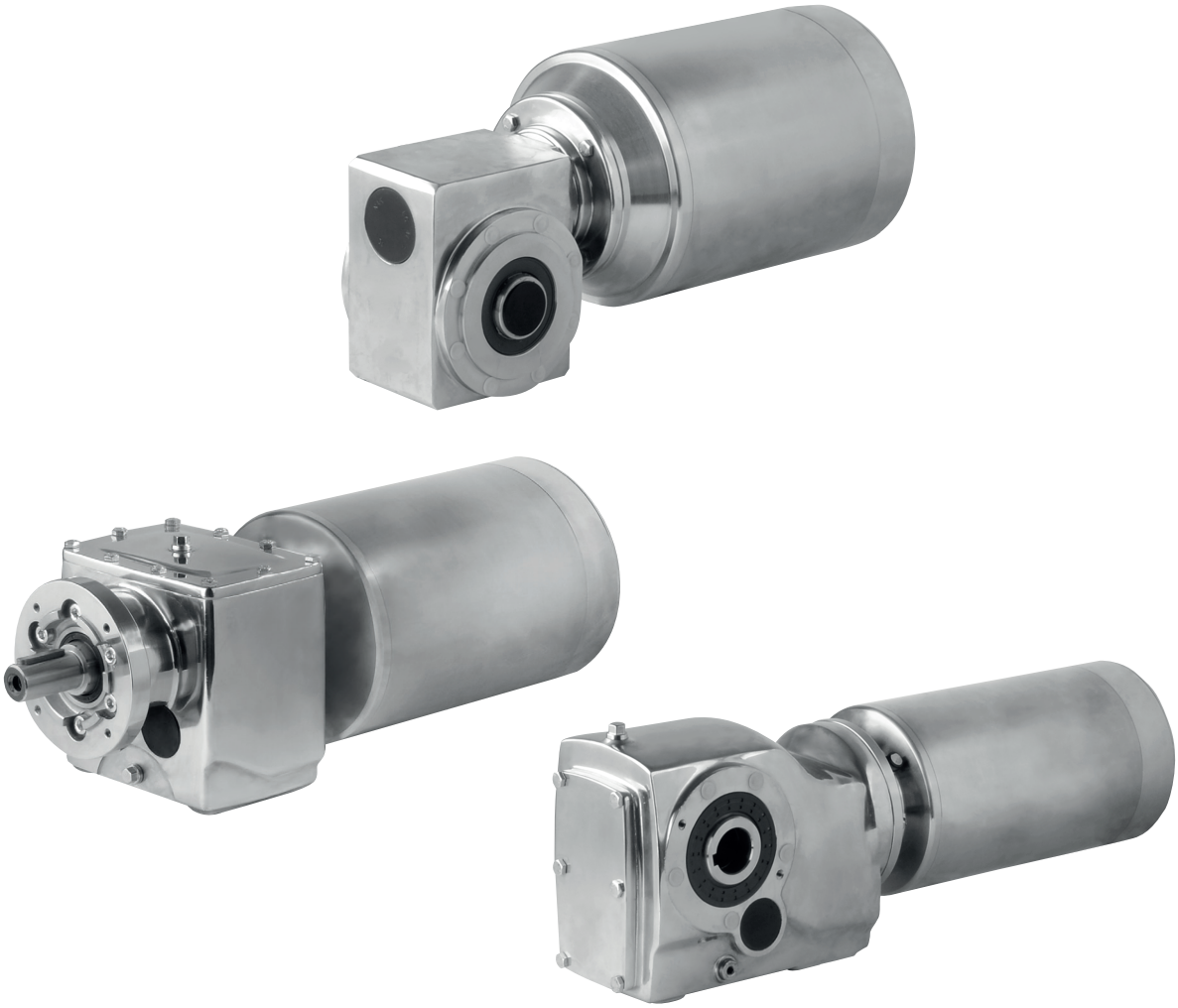

EURN000000_005

2.1 RVS JRESR rechte reductoren / CRES JRESR Helical Gear motors

2.1.1 Onderdelenlijst / Partslist

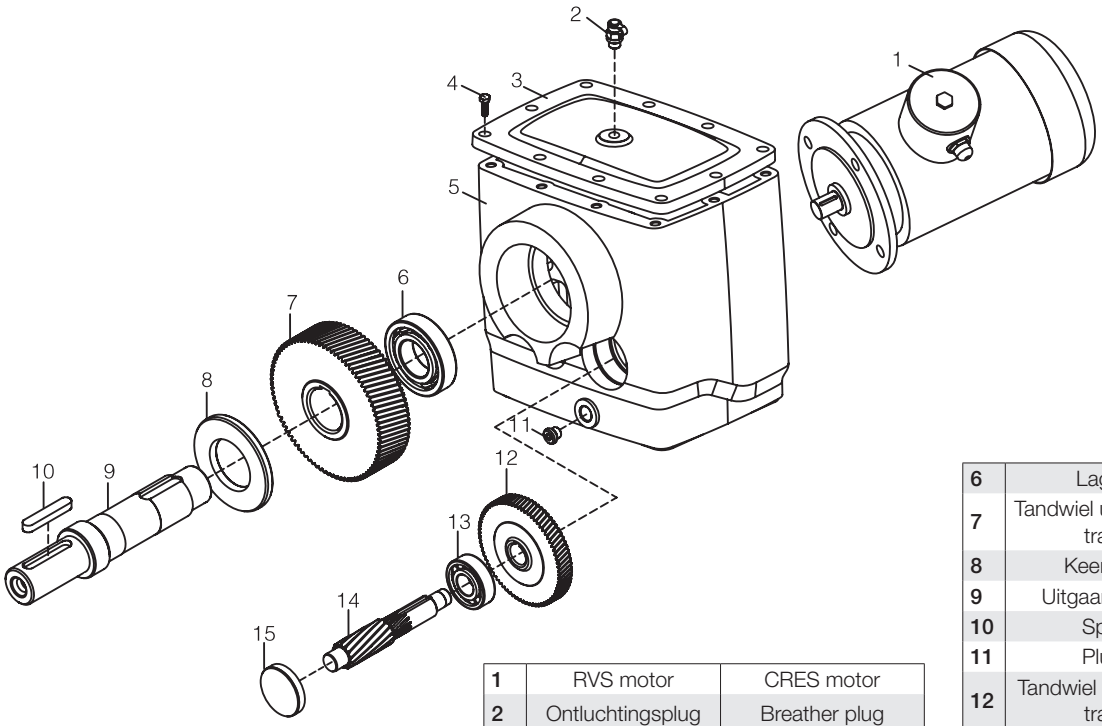

1	RVS motor	CRES motor
2	Ontluchtingsplug	Breather plug
3	Deksel	Gearcase cover
4	Bout	Bolt
5	Behuizing	Gear case

6	Lager	Bearing
7	Tandwiel uitgaande trap	Output gear
8	Keerring	Seal
9	Uitgaande as	Output shaft
10	Spie	Key
11	Plug	Plug
12	Tandwiel ingaande trap	Input gear
13	Lager	Bearing
14	Rondsel as	Gear shaft
15	Blinddop	Closing cover

2.1.2 Product Codering / Product Coding

J	RESR	F	67	II	SS90	– 4P	– 1.5	– 61.26	– 180°
1	2	3	4	5	6	7	8	9	10

1

Fabrikantscode

Manufacturer code

2

Serie code
RVS rechte tandwielkast
voor de voedingsmiddelenindustrie

Model code
CRES helical reducer for the food and beverage industry

3

Bouwvorm
Geen code – voetmontage
F – flensmontage

Assembly type
No code - foot mounting
F – flange installation

4

Bouwgrootte / Size
67

5

Flensgrootte
Geen code – zonder flens of
1 type flens of kleinste flens
II – middelste flens (bij 3 types)
of grootste flens (bij 2 types)
III – grootste flens (bij 3 types)

Flange size
No code - without flange
or just one kind or smallest flange
II – medium flange (3 types)
or the large flange (2 types)
III – the biggest flange (3 type)

6

Type roestvaststalen elektromotor
Bouwgrootte: 90

Stainless steel motor code
Size: 90

7

Aantal polen / Number of poles
4

8

Motorvermogen / Motor power
1.5 kw

9

Overbrengingsverhouding / Gear ratio
61.26

10

Montagepositie klemmenkast
Terminal box position
0° graden / degrees
90° graden / degrees
180° graden / degrees
270° graden / degrees

EURN000000_005

Hub van Doorneweg 8 • 2171 KZ Sassenheim – NL • T +31(0)252 228850 • F +31(0)252 228235 • E sales@euronorm.nl • I euronormdrives.com

2.1.3 Selectie table / Selection table

Uit-gaand toerental	Uit-gaand koppel	Over-brengings-verhou-ding	Toelaat-bare radiale belasting	Service factor	Type
Output speed	Output torque	Ratio	Permitted overhung load	Service factor	Model
n_a	T_a	i	F_{Ra} 1)	f_B	
[r/min]	[N · m]		[N]		
0.18kW					
4.3	395	199.81	9370	1.50	
4.7	365	184.07	9560	1.65	
5.5	310	158.14	9830	1.90	
6.3	270	137.67	10000	2.2	
6.8	255	128.97	10100	2.4	JRESR67SS71-6P
7.6	225	113.94	10200	2.7	JRESRF67SS71-6P
8.2	210	105.83	10200	2.9	
9.1	190	95.91	10300	3.2	
10	170	86.11	10300	3.5	
12	147	74.17	10400	4.1	
12	138	69.75	10400	4.4	
6.6	260	199.81	10100	2.3	
7.2	240	184.07	10100	2.5	
8.4	205	158.14	10200	2.9	
9.6	179	137.67	10300	3.4	JRESR67SS63-4P
10	168	128.97	10300	3.6	JRESRF67SS63-4P
12	148	113.94	10400	4.0	
12	138	105.83	10400	4.4	
4.7	370	186.89	7420	1.20	
5.1	340	172.17	7510	1.30	
5.9	290	147.92	7650	1.55	JRESR57SS71-6P
6.8	255	128.77	7740	1.75	JRESRF57SS71-6P
7.2	240	120.63	7780	1.90	
7.1	245	186.89	7770	1.85	
7.7	225	172.17	7810	2.0	
8.9	193	147.92	7870	2.3	
10	168	128.77	7900	2.7	JRESR57SS63-4P
11	157	120.63	7920	2.9	JRESRF57SS63-4P
12	139	106.58	7940	3.2	
13	129	98.99	7950	3.5	
15	117	89.71	7970	3.9	
7.5	230	176.88	5740	1.30	
8.1	210	162.94	5810	1.40	JRESR47SS63-4P
9.4	182	139.99	5910	1.65	JRESRF47SS63-4P
11	159	121.87	5980	1.90	
12	149	114.17	6000	2.0	
13	131	100.86	6040	2.3	
14	122	93.68	6060	2.5	JRESR47SS63-4P
16	111	84.90	6080	2.7	JRESRF47SS63-4P
17	99	76.23	6100	3.0	
7.0	245	123.66	3060	0.80	
8.3	210	105.28	4840	0.95	JRESR37SS71-6P
9.6	179	90.77	5190	1.10	JRESRF37SS71-6P
10	167	84.61	5310	1.20	
9.8	176	134.82	5230	1.15	
11	161	123.66	5370	1.25	JRESR37SS63-4P
13	137	105.28	5580	1.45	JRESRF37SS63-4P
15	118	90.77	5710	1.70	

Uit-gaand toerental	Uit-gaand koppel	Over-brengings-verhou-ding	Toelaat-bare radiale belasting	Service factor	Type
Output speed	Output torque	Ratio	Permitted overhung load	Service factor	Model
n_a	T_a	i	F_{Ra} 1)	f_B	
[r/min]	[N · m]		[N]		
0.18kW					
16	110	84.61	5760	1.80	
18	96	73.96	5840	2.1	
19	90	69.33	5870	2.2	JRESR37SS63-4P
22	80	61.18	5920	2.5	JRESRF37SS63-4P
24	73	55.76	5940	2.8	
27	63	48.08	5960	3.2	
0.25kW					
4.4	540	199.81	8190	1.10	
4.8	500	184.07	8590	1.20	
5.6	430	158.14	9140	1.40	
6.4	375	137.67	9500	1.60	JRESR67SS71-6P
6.8	350	128.97	9630	1.70	JRESRF67SS71-6P
7.7	310	113.94	9840	1.95	
8.3	285	105.83	9940	2.1	
6.5	365	199.81	9540	1.65	
7.1	340	184.07	9700	1.80	
8.2	290	158.14	9930	2.1	
9.4	255	137.67	10100	2.4	
10	235	128.97	10100	2.5	JRESR67SS71-4P
11	210	113.94	10200	2.9	JRESRF67SS71-4P
12	194	105.83	10300	3.1	
14	176	95.91	10300	3.4	
15	158	86.11	10400	3.8	
4.7	505	186.89	6450	0.90	
5.1	465	172.17	7030	0.95	
5.9	400	147.92	7300	1.10	
6.8	350	128.77	7480	1.30	JRESR57SS71-6P
7.3	325	120.63	7550	1.35	JRESRF57SS71-6P
8.3	290	106.58	7660	1.55	
8.9	270	98.99	7710	1.70	
7.0	345	186.89	7500	1.30	
7.6	315	172.17	7590	1.40	
8.8	270	147.92	7700	1.65	
10	235	128.77	7780	1.90	
11	220	120.63	7810	2.0	JRESR57SS71-4P
12	196	106.58	7860	2.3	JRESRF57SS71-4P
13	182	98.99	7880	2.5	
14	165	89.71	7910	2.7	
16	148	80.55	7930	3.0	
19	127	69.23	7960	3.5	
7.4	325	176.88	5280	0.90	
8.0	300	162.94	5420	1.00	JRESR47SS71-4P
9.3	255	139.99	5630	1.15	JRESRF47SS71-4P
11	225	121.87	5770	1.35	
11	210	114.17	5820	1.45	
13	185	100.86	5900	1.60	JRESR47SS71-4P
14	172	93.68	5940	1.75	JRESRF47SS71-4P
15	156	84.90	5980	1.90	

EURN000000_005

Uit-gaand toerental	Uit-gaand koppel	Over-brengings-verhou-ding	Toelaat-bare radiale belasting	Service factor	Type
Output speed	Output torque	Ratio	Permitted overhung load	Service factor	Model
n_a	T_a	i	F_{Ra} 1)	f_B	
[r/min]	[N · m]		[N]		
0.25kW					
17	140	76.23	6020	2.1	
19	126	68.54	6050	2.4	
20	118	64.21	6070	2.5	JRESR47SS71-4P
23	104	56.73	6090	2.9	JRESRF47SS71-4P
25	97	52.69	6100	3.1	
27	88	47.75	6080	3.4	
9.6	250	134.82	2630	0.80	
11	225	123.66	4560	0.90	
12	193	105.28	5030	1.05	
14	167	90.77	5320	1.20	
15	155	84.61	5420	1.30	
18	136	73.96	5590	1.45	
19	127	69.33	5650	1.55	JRESR37SS71-4P
21	112	61.18	5750	1.80	JRESRF37SS71-4P
23	102	55.76	5800	1.95	
27	88	48.08	5870	2.3	
29	82	44.81	5760	2.4	
33	72	39.17	5540	2.8	
35	67	36.72	5430	3.0	
40	60	32.40	5230	3.4	
0.37kW					
5.7	620	158.14	7300	0.95	
6.5	540	137.67	8210	1.10	JRESR67SS80-6P
7.0	505	128.97	8530	1.20	JRESRF67SS80-6P
7.9	445	113.94	9010	1.35	
6.9	510	199.81	8480	1.15	
7.5	470	184.07	8820	1.25	
8.7	405	158.14	9310	1.50	
10	355	137.67	9620	1.70	
11	330	128.97	9740	1.80	
12	290	113.94	9920	2.1	JRESR67SS71-4P
13	270	105.83	10000	2.2	JRESRF67SS71-4P
14	245	95.91	10100	2.4	
16	220	86.11	10200	2.7	
19	190	74.17	10300	3.2	
20	179	69.75	10300	3.4	
23	157	61.26	10400	3.8	
24	146	56.89	10400	4.1	
7.0	505	128.77	6510	0.90	
7.5	475	120.63	7000	0.95	JRESR57SS80-6P
8.4	420	106.58	7240	1.10	JRESRF57SS80-6P
9.1	390	98.99	7350	1.15	
7.4	480	186.89	6980	0.95	
8.0	440	172.17	7140	1.00	
9.3	380	147.92	7390	1.20	JRESR57SS71-4P
11	330	128.77	7550	1.35	JRESRF57SS71-4P
11	310	120.63	7610	1.45	
13	275	106.58	7700	1.65	

Uit-gaand toerental	Uit-gaand koppel	Over-brengings-verhou-ding	Toelaat-bare radiale belasting	Service factor	Type
Output speed	Output torque	Ratio	Permitted overhung load	Service factor	Model
n_a	T_a	i	F_{Ra} 1)	f_B	
[r/min]	[N · m]		[N]		
0.37kW					
14	255	98.99	7750	1.80	
15	230	89.71	7800	1.95	
17	205	80.55	7840	2.2	
20	177	69.23	7890	2.5	JRESR57SS71-4P
21	166	64.85	7910	2.7	JRESRF57SS71-4P
24	147	57.29	7760	3.1	
26	136	53.22	7600	3.3	
29	124	48.23	7380	3.6	
9.9	360	139.99	3490	0.85	
11	310	121.87	5350	0.95	
12	290	114.17	5460	1.05	
14	260	100.86	5630	1.15	
15	240	93.68	5700	1.25	
16	215	84.90	5790	1.40	
18	195	76.23	5870	1.55	
20	176	68.54	5930	1.70	JRESR47SS71-4P
21	164	64.21	5960	1.80	JRESRF47SS71-4P
24	145	56.73	6010	2.1	
26	135	52.69	5990	2.2	
29	122	47.75	5820	2.5	
32	110	42.87	5650	2.7	
37	95	36.93	5410	3.2	
40	89	34.73	5310	3.4	
41	87	33.79	5270	2.8	
44	80	31.12	5150	2.8	
52	69	26.74	4920	4.4	JRESR47SS71-4P
59	60	23.28	4720	5.0	JRESRF47SS71-4P
63	56	21.81	4620	5.4	
15	230	90.77	4250	0.85	
16	215	84.61	4720	0.90	JRESR37SS71-4P
19	189	73.96	5070	1.05	JRESRF37SS71-4P
20	178	69.33	5210	1.15	
23	157	61.18	5410	1.30	
25	143	55.76	5530	1.40	
29	123	48.08	5590	1.60	
31	115	44.81	5480	1.75	JRESR37SS71-4P
35	100	39.17	5290	2.0	JRESRF37SS71-4P
38	94	36.72	5190	2.1	
43	83	32.40	5010	2.4	
48	74	28.73	4850	2.7	
57	63	24.42	4620	3.2	
49	73	28.32	4830	2.8	
53	67	26.03	4710	2.8	JRESR37SS71-4P
62	57	22.27	4500	3.5	JRESRF37SS71-4P
71	49	19.31	4320	4.1	
76	46	18.05	4230	4.3	
88	40	15.60	4050	5.0	JRESR37SS71-4P
104	34	13.25	3850	5.6	JRESRF37SS71-4P
117	30	11.83	3720	6.0	

EURN000000_005

Uit-gaand toerental	Uit-gaand koppel	Over-brengings-verhou-ding	Toelaat-bare radiale belasting	Service factor	Type
Output speed	Output torque	Ratio	Permitted overhung load	Service factor	Model
n_a	T_a	i	F_{Ra} 1)	f_B	
[r/min]	[N · m]		[N]		
0.55kW					
8.6	610	158.14	7430	1.00	
9.9	530	137.67	8290	1.15	
11	500	128.97	8600	1.20	
12	440	113.94	9060	1.35	
13	410	105.83	9280	1.45	JRESR67SS80-4P
14	370	95.91	9520	1.60	JRESRF67SS80-4P
16	335	86.11	9730	1.80	
18	285	74.17	9940	2.1	
20	270	69.75	10000	2.2	
22	235	61.26	10100	2.5	
24	220	56.89	10200	2.7	
11	465	120.63	7030	0.95	
13	410	106.58	7260	1.10	
14	380	98.99	7370	1.20	
15	345	89.71	7490	1.30	
17	310	80.55	7600	1.45	
20	265	69.23	7710	1.70	JRESR57SS80-4P
21	250	64.85	7750	1.80	JRESRF57SS80-4P
24	220	57.29	7530	2.0	
26	205	53.22	7390	2.2	
28	186	48.23	7190	2.4	
31	167	43.30	6980	2.7	
36	144	37.30	6700	3.1	
39	136	35.07	6580	3.3	
52	102	26.31	6060	4.4	
54	97	24.99	5970	4.7	JRESR57SS80-4P
62	85	21.93	5740	5.3	JRESRF57SS80-4P
73	72	18.60	5460	6.3	
15	360	93.68	3280	0.85	
16	330	84.90	5230	0.90	
18	295	76.23	5450	1.00	
20	265	68.54	5600	1.15	
21	250	64.21	5670	1.20	
24	220	56.73	5790	1.35	JRESR47SS80-4P
26	205	52.69	5770	1.45	JRESRF47SS80-4P
28	184	47.75	5630	1.65	
32	166	42.87	5470	1.80	
37	143	36.93	5260	2.1	
39	134	34.73	5180	2.2	
46	115	29.88	4970	2.6	
51	103	26.74	4820	2.9	
58	90	23.28	4630	3.3	JRESR47SS80-4P
62	84	21.81	4550	3.6	JRESRF47SS80-4P
22	235	61.18	3910	0.85	
24	215	55.76	4740	0.95	JRESR37SS80-4P
28	186	48.08	5120	1.10	JRESRF37SS80-4P
30	173	44.81	5230	1.15	

Uit-gaand toerental	Uit-gaand koppel	Over-brengings-verhou-ding	Toelaat-bare radiale belasting	Service factor	Type
Output speed	Output torque	Ratio	Permitted overhung load	Service factor	Model
n_a	T_a	i	F_{Ra} 1)	f_B	
[r/min]	[N · m]		[N]		
0.55kW					
35	151	39.17	5070	1.30	
37	142	36.72	4990	1.40	JRESR37SS80-4P
42	125	32.40	4840	1.60	JRESRF37SS80-4P
47	111	28.73	4700	1.80	
56	94	24.42	4500	2.1	
61	86	22.27	4390	2.3	
70	75	19.31	4220	2.7	
75	70	18.05	4140	2.9	JRESR37SS80-4P
87	60	15.60	3970	3.3	JRESRF37SS80-4P
103	51	13.25	3790	3.7	
115	46	11.83	3670	4.0	
0.75kW					
11	670	128.97	4040	0.90	
12	590	113.94	7660	1.00	
13	550	105.83	8120	1.10	
14	500	95.91	8600	1.20	
16	445	86.11	9010	1.35	JRESR67SS80-4P
19	385	74.17	9430	1.55	JRESRF67SS80-4P
20	360	69.75	9570	1.65	
23	320	61.26	9800	1.90	
24	295	56.89	9910	2.0	
27	270	51.56	10000	2.2	
30	240	46.29	10100	2.5	
13	555	106.58	4610	0.80	
14	515	98.99	6200	0.90	
15	465	89.71	7040	0.95	JRESR57SS80-4P
17	420	80.55	7240	1.10	JRESRF57SS80-4P
20	360	69.23	7450	1.25	
21	335	64.85	7430	1.35	
24	295	57.29	7220	1.50	
26	275	53.22	7090	1.65	
29	250	48.23	6930	1.80	
32	225	43.30	6740	2.0	JRESR57SS80-4P
37	194	37.30	6490	2.3	JRESRF57SS80-4P
39	182	35.07	6380	2.5	
46	157	30.18	6130	2.9	
51	140	26.97	5940	3.2	
52	137	26.31	5900	3.3	
55	130	24.99	5820	3.5	JRESR57SS80-4P
63	114	21.93	5610	4.0	JRESRF57SS80-4P
74	97	18.60	5350	4.7	
20	355	68.54	3660	0.85	
21	335	64.21	4950	0.90	JRESR47SS80-4P
24	295	56.73	5450	1.00	JRESRF47SS80-4P
26	275	52.69	5480	1.10	
29	250	47.75	5370	1.20	JRESR47SS80-4P
32	225	42.87	5240	1.35	JRESRF47SS80-4P

EURN000000_005

Uit-gaand toerental	Uit-gaand koppel	Over-brengings-verhou-ding	Toelaat-bare radiale belasting	Service factor	Type
Output speed	Output torque	Ratio	Permitted overhung load	Service factor	Model
n_a	T_a	i	F_{Ra} 1)	f_B	
[r/min]	[N · m]		[N]		
0.75kW					
37	192	36.93	5060	1.55	JRESR47SS80-4P JRESRF47SS80-4P
40	180	34.73	4980	1.65	
46	155	29.88	4800	1.95	
52	139	26.70	4660	2.2	
58	122	23.59	4510	2.5	
52	139	26.74	4660	2.2	JRESR47SS80-4P JRESRF47SS80-4P
59	121	23.28	4490	2.5	
63	113	21.18	4420	2.7	
72	100	19.27	4270	3.0	
77	93	17.89	4180	3.1	
85	84	16.22	4070	3.3	
29	250	48.08	2330	0.80	JRESR37SS80-4P JRESRF37SS80-4P
31	235	44.81	4230	0.85	
35	205	39.17	4720	1.00	
38	191	36.72	4740	1.05	JRESR37SS80-4P JRESRF37SS80-4P
43	168	32.40	4610	1.20	
48	149	28.73	4490	1.35	
57	127	24.42	4320	1.60	
62	116	22.27	4230	1.75	JRESR37SS80-4P JRESRF37SS80-4P
71	100	19.31	4080	2.0	
76	94	18.05	4010	2.1	
88	81	15.60	3850	2.5	
104	69	13.25	3690	2.8	
117	61	11.83	3570	3.0	
137	53	10.11	3420	3.2	
146	49	9.47	3360	3.4	
1.1kW					
16	645	86.11	6820	0.95	JRESR67SS90-4P JRESRF67SS90-4P
19	555	74.17	8040	1.10	
20	525	69.75	8370	1.15	
23	460	61.26	8920	1.30	
25	425	56.89	9160	1.40	
27	385	51.56	9420	1.55	
30	345	46.29	9650	1.75	
35	300	39.88	9890	1.95	
37	280	37.50	9970	2.0	
43	240	32.27	10100	2.2	
49	215	28.83	10200	2.4	
50	210	28.13	10200	2.6	JRESR67SS90-4P JRESRF67SS90-4P
52	200	26.72	10100	2.7	
60	176	23.44	9730	3.2	
70	149	19.89	9270	4.0	
20	520	68.23	5990	0.85	JRESR57SS90-4P JRESRF57SS90-4P
22	485	64.85	6850	0.90	
24	430	57.29	6700	1.05	
26	400	53.22	6610	1.15	JRESR57SS90-4P JRESRF57SS90-4P
29	360	48.23	6490	1.25	
32	325	43.30	6350	1.40	
38	280	37.30	6140	1.60	

Uit-gaand toerental	Uit-gaand koppel	Over-brengings-verhou-ding	Toelaat-bare radiale belasting	Service factor	Type
Output speed	Output torque	Ratio	Permitted overhung load	Service factor	Model
n_a	T_a	i	F_{Ra} 1)	f_B	
[r/min]	[N · m]		[N]		
1.1kW					
40	265	35.07	6060	1.70	JRESR57SS90-4P JRESRF57SS90-4P
46	225	30.18	5850	2.0	
52	200	26.97	5690	2.2	
53	197	26.31	5650	2.3	
56	188	24.99	5580	2.4	
64	165	21.93	5400	2.7	
75	140	18.60	5170	3.2	
83	126	16.79	5030	3.6	
29	360	47.75	3500	0.85	JRESR47SS90-4P JRESRF47SS90-4P
33	320	42.87	4850	0.95	
38	275	36.93	4720	1.10	
40	260	34.73	4660	1.15	
47	225	29.88	4520	1.35	
52	200	26.70	4410	1.50	
59	177	23.59	4290	1.70	
60	175	23.28	4270	1.70	JRESR47SS90-4P JRESRF47SS90-4P
64	164	21.81	4210	1.85	
73	145	19.27	4080	2.0	
78	134	17.89	4010	2.2	JRESR47SS90-4P JRESRF47SS90-4P
86	122	16.22	3910	2.3	
96	109	14.56	3800	2.4	
112	94	12.54	3650	2.7	
119	89	11.79	3590	2.8	
138	76	10.15	3450	3.0	
154	68	9.07	3340	3.2	
43	245	32.40	2900	0.80	JRESR37SS90-4P JRESRF37SS90-4P
49	215	28.73	3300	0.95	
57	183	24.42	3720	1.10	
73	145	19.31	3840	1.40	JRESR37SS90-4P JRESRF37SS90-4P
78	135	18.05	3790	1.50	
90	117	15.60	3660	1.70	
106	99	13.25	3520	1.90	JRESR37SS90-4P JRESRF37SS90-4P
118	89	11.83	3430	2.1	
139	76	10.11	3290	2.2	
148	71	9.47	3230	2.3	
176	60	7.97	3090	2.6	
210	50	6.67	2920	2.9	
247	43	5.67	2790	3.3	
277	38	5.06	2700	3.6	
1.5kW					
23	620	61.26	7280	0.95	JRESR67SS90-4P JRESRF67SS90-4P
25	580	56.89	7810	1.05	
27	525	51.56	8370	1.15	
30	470	46.29	8830	1.30	
35	405	39.88	9300	1.45	
38	380	37.50	9460	1.50	
44	330	32.27	9750	1.65	
49	295	28.83	9920	1.80	

EURN000000_005

Uit-gaand toerental	Uit-gaand koppel	Over-brengings-verhou-ding	Toelaat-bare radiale belasting	Service factor	Type
Output speed	Output torque	Ratio	Permitted overhung load	Service factor	Model
n_a	T_a	i	F_{Ra} 1)	f_B	
[r/min]	[N · m]		[N]		
1.5kW					
50	285	28.13	9950	1.90	JRESR67SS90-4P JRESRF67SS90-4P
53	270	26.72	9850	2.0	
60	240	23.44	9500	2.4	
71	200	19.89	9070	3.0	
79	182	17.95	8810	3.2	
27	540	53.22	5140	0.85	JRESR57SS90-4P JRESRF57SS90-4P
29	490	48.23	6010	0.90	
33	440	43.30	5920	1.00	
38	380	37.30	5770	1.20	JRESR57SS90-4P JRESRF57SS90-4P
40	355	35.07	5710	1.25	
47	305	30.18	5540	1.45	
52	275	26.97	5420	1.65	
54	265	26.31	5390	1.70	JRESR57SS90-4P JRESRF57SS90-4P
56	255	24.99	5330	1.75	
64	225	21.93	5170	2.0	
76	189	18.60	4980	2.4	
84	171	16.79	4850	2.6	
95	150	14.77	4700	2.9	
101	142	13.95	4630	3.0	
119	121	11.88	4440	3.4	
38	375	36.93	2380	0.80	JRESR47SS90-4P JRESRF47SS90-4P
41	355	34.73	3840	0.85	
47	305	29.88	4220	1.00	JRESR47SS90-4P JRESRF47SS90-4P
53	270	26.70	4140	1.10	
60	240	23.59	4050	1.25	
61	235	23.28	4040	1.25	JRESR47SS90-4P JRESRF47SS90-4P
65	220	21.81	3990	1.35	
73	196	19.27	3890	1.50	
79	182	17.89	3830	1.60	
87	165	16.22	3740	1.65	
97	148	14.56	3650	1.80	
112	127	12.54	3520	1.95	
120	120	11.79	3470	2.1	
139	103	10.15	3340	2.2	
155	92	9.07	3240	2.4	
176	81	8.01	3140	2.5	
182	79	7.76	3060	2.1	
203	71	6.96	2980	2.3	
235	61	6.00	2860	2.6	
250	57	5.64	2810	2.7	
291	49	4.85	2700	3.0	
325	44	4.34	2610	3.3	
368	39	3.83	2520	3.7	
73	196	19.31	2660	1.00	JRESR37SS90-4P JRESRF37SS90-4P
78	183	18.05	2840	1.10	
90	159	15.60	3160	1.25	
106	135	13.25	3350	1.40	JRESR37SS90-4P JRESRF37SS90-4P
119	120	11.83	3270	1.50	

Uit-gaand toerental	Uit-gaand koppel	Over-brengings-verhou-ding	Toelaat-bare radiale belasting	Service factor	Type
Output speed	Output torque	Ratio	Permitted overhung load	Service factor	Model
n_a	T_a	i	F_{Ra} 1)	f_B	
[r/min]	[N · m]		[N]		
1.5kW					
140	103	10.11	3160	1.65	JRESR37SS90-4P JRESRF37SS90-4P
149	96	9.47	3110	1.75	
177	81	7.97	2980	1.95	
211	68	6.67	2820	2.1	
249	58	5.67	2710	2.5	
279	51	5.06	2630	2.6	
326	44	4.32	2520	2.9	
348	41	4.05	2470	3.0	
414	35	3.41	2360	3.2	
211	68	13.25	2850	2.8	JRESR37SS90-2P JRESRF37SS90-2P
237	61	11.83	2770	3.0	
277	52	10.11	2650	3.3	
296	48	9.47	2610	3.5	
351	41	7.97	2480	3.8	
2.2kW					
35	595	39.88	7630	1.00	JRESR67SS100-4P JRESRF67SS100-4P
38	560	37.50	8020	1.00	
44	480	32.27	8750	1.10	
49	430	28.83	9140	1.20	
60	350	23.44	9140	1.60	JRESR67SS100-4P JRESRF67SS100-4P
71	295	19.89	8760	2.0	
79	270	17.95	8530	2.2	
89	235	15.79	8240	2.4	
95	220	14.91	8110	2.5	
111	189	12.70	7760	2.8	
122	172	11.54	7560	2.9	
141	149	10.00	7250	3.2	
162	130	8.70	6960	3.4	
181	116	7.79	6760	3.3	
38	555	37.30	4490	0.80	JRESR57SS100-4P JRESRF57SS100-4P
40	525	35.07	5110	0.85	
47	450	30.18	5030	1.00	
52	400	26.97	4960	1.10	
64	325	21.93	4800	1.40	JRESR57SS100-4P JRESRF57SS100-4P
76	275	18.60	4660	1.60	
84	250	16.79	4570	1.80	
95	220	14.77	4450	2.0	
101	210	13.95	4390	2.1	
119	177	11.88	4230	2.3	
131	161	10.79	4140	2.4	
151	139	9.35	4000	2.7	
156	135	9.06	3980	2.8	
177	119	7.97	3850	3.0	
107	197	26.31	4340	2.3	JRESR57SS90-2P JRESRF57SS90-2P
112	187	24.99	4290	2.4	
128	164	21.93	4160	2.8	
151	139	18.60	3990	3.2	
167	126	16.79	3890	3.6	
190	111	14.77	3760	3.9	
201	104	13.95	3710	4.1	

EURN000000_005

Uit-gaand toerental	Uit-gaand koppel	Over-brengings-verhou-ding	Toelaat-bare radiale belasting	Service factor	Type
Output speed	Output torque	Ratio	Permitted overhung load	Service factor	Model
n_a	T_a	i	F_{Ra} 1)	f_B	
[r/min]	[N · m]		[N]		
2.2kW					
73	285	19.27	3550	1.05	
87	240	16.22	3460	1.15	
97	215	14.56	3400	1.20	
112	187	12.54	3310	1.35	
120	176	11.79	3270	1.40	
139	151	10.15	3160	1.50	
155	135	9.07	3090	1.65	JRESR47SS100-4P
176	119	8.01	3000	1.70	JRESRF47SS100-4P
182	116	7.76	2910	1.40	
203	104	6.96	2840	1.55	
235	89	6.00	2740	1.75	
250	84	5.64	2700	1.85	
291	72	4.85	2600	2.1	
325	65	4.34	2530	2.3	
368	57	3.83	2440	2.5	
121	174	23.28	3260	1.70	
129	163	21.81	3220	1.85	
146	144	19.27	3130	2.1	
157	134	17.89	3080	2.2	
173	121	16.22	3010	2.3	JRESR47SS90-2P
193	109	14.56	2930	2.4	JRESRF47SS90-2P
224	94	12.54	2830	2.7	
238	88	11.79	2780	2.8	
277	76	10.15	2680	3.0	
310	68	9.07	2600	3.2	
351	60	8.01	2510	3.4	
90	230	15.60	1070	0.85	JRESR37SS100-4P
106	198	13.25	1660	0.95	JRESRF37SS100-4P
119	176	11.83	1990	1.05	
140	151	10.11	2360	1.15	
149	141	9.47	2480	1.20	
177	119	7.97	2750	1.30	
211	99	6.67	2470	1.45	JRESR37SS100-4P
249	84	5.67	2570	1.70	JRESRF37SS100-4P
279	75	5.06	2500	1.80	
326	64	4.32	2410	1.95	
348	60	4.05	2370	2.0	
414	51	3.41	2270	2.2	
146	144	19.31	2440	1.4	JRESR37SS90-2P
156	135	18.05	2560	1.5	JRESRF37SS90-2P
180	117	15.60	2780	1.7	
212	99	13.25	2700	1.9	
237	89	11.83	2630	2.1	JRESR37SS90-2P
278	76	10.11	2540	2.3	JRESRF37SS90-2P
297	71	9.47	2500	2.4	
352	60	7.97	2390	2.6	

Uit-gaand toerental	Uit-gaand koppel	Over-brengings-verhou-ding	Toelaat-bare radiale belasting	Service factor	Type
Output speed	Output torque	Ratio	Permitted overhung load	Service factor	Model
n_a	T_a	i	F_{Ra} 1)	f_B	
[r/min]	[N · m]		[N]		
2.2kW					
421	50	6.67	2260	2.9	
496	42	5.67	2170	3.4	
555	38	5.06	2100	3.6	JRESR37SS90-2P
650	32	4.32	2010	3.9	JRESRF37SS90-2P
694	30	4.05	1980	4.0	
824	26	3.41	1880	4.4	
3.0kW					
60	480	23.44	8730	1.15	
70	405	19.89	8420	1.45	
78	365	17.95	8230	1.60	
89	325	15.79	7980	1.75	JRESR67SS100-4P
94	305	14.91	7860	1.80	JRESRF67SS100-4P
110	260	12.70	7550	2.0	
121	235	11.54	7360	2.1	
140	205	10.00	7090	2.3	
52	550	26.97	4330	0.80	JRESR57SS100-4P JRESRF57SS100-4P
64	450	21.93	4380	1.00	JRESR57SS100-4P
75	380	18.60	4300	1.20	JRESRF57SS100-4P
83	345	16.79	4250	1.30	
95	300	14.77	4160	1.45	
100	285	13.95	4130	1.50	
118	245	11.88	4010	1.65	
130	220	10.79	3940	1.75	
150	191	9.35	3820	1.95	
155	185	9.06	3810	2.0	JRESR57SS100-4P
176	163	7.97	3700	2.2	JRESRF57SS100-4P
186	154	7.53	3650	2.3	
218	131	6.41	3520	2.6	
240	119	5.82	3430	2.7	
277	103	5.05	3310	3.0	
319	90	4.39	3190	3.1	
128	225	21.93	3950	2.0	
151	190	18.60	3820	2.4	
167	172	16.79	3730	2.6	JRESR57SS100-2P
190	151	14.77	3620	2.9	JRESRF57SS100-2P
201	143	13.95	3570	3.0	
236	122	11.88	3440	3.3	
259	110	10.79	3360	3.5	
86	330	16.22	2030	0.85	JRESR47SS100-4P
96	300	14.56	2500	0.90	JRESRF47SS100-4P
112	255	12.54	3040	0.95	
119	240	11.79	3040	1.00	JRESR47SS100-4P
138	210	10.15	2970	1.10	JRESRF47SS100-4P
154	186	9.07	2910	1.20	JRESR47SS100-4P
175	164	8.01	2840	1.25	JRESRF47SS100-4P
181	159	7.76	2740	1.05	

EURN000000_005

Uit-gaand toerental / Output speed n_a [r/min]	Uit-gaand koppel / Output torque T_a [N · m]	Over-brengings-verhou-ding / Ratio i	Toelaat-bare radiale belasting / Permitted overhung load F_{Ra} [N] [1)]	Service factor / Service factor f_B	Type / Model
3.0kW					
201	143	6.96	2680	1.10	JRESR47SS100-4P JRESRF47SS100-4P
233	123	6.00	2610	1.25	
248	115	5.64	2580	1.35	
288	99	4.85	2490	1.50	
323	89	4.34	2430	1.65	
365	78	3.83	2360	1.85	
237	121	11.79	2670	2.0	JRESR47SS100-2P JRESRF47SS100-2P
276	104	10.15	2580	2.2	
309	93	9.07	2510	2.4	
349	82	8.01	2430	2.5	
361	79	7.76	2370	2.1	
402	71	6.96	2310	2.2	
467	61	6.00	2220	2.5	
496	58	5.64	2190	2.7	
577	50	4.85	2100	3.0	
646	44	4.34	2040	3.3	
731	39	3.83	1970	3.7	
139	205	10.11	780	0.80	JRESR37SS100-4P JRESRF37SS100-4P
148	194	9.47	1010	0.85	
176	163	7.97	1510	0.95	
210	137	6.67	1250	1.05	JRESR37SS100-4P JRESRF37SS100-4P
247	116	5.67	1630	1.25	
277	104	5.06	1830	1.30	
324	88	4.32	2070	1.45	
346	83	4.05	2140	1.45	
411	70	3.41	2180	1.60	
277	103	10.11	2340	1.65	JRESR37SS100-2P JRESRF37SS100-2P
296	97	9.47	2380	1.70	
351	82	7.97	2290	1.90	
420	68	6.67	2170	2.1	
494	58	5.67	2090	2.5	
553	52	5.06	2030	2.6	
648	44	4.32	1950	2.9	
692	41	4.05	1920	3.0	
821	35	3.41	1840	3.2	
4.0kW					
71	535	19.89	7960	1.10	JRESR67SS112-4P JRESRF67SS112-4P
79	485	17.95	7800	1.20	
90	425	15.79	7600	1.30	
95	400	14.91	7510	1.35	
112	340	12.70	7240	1.50	
123	310	11.54	7080	1.60	
142	270	10.00	6840	1.75	
163	235	8.70	6600	1.90	
182	210	7.79	6440	1.80	
193	198	7.36	6340	1.85	
227	169	6.27	6070	1.95	
249	153	5.70	5920	2.0	

Uit-gaand toerental / Output speed n_a [r/min]	Uit-gaand koppel / Output torque T_a [N · m]	Over-brengings-verhou-ding / Ratio i	Toelaat-bare radiale belasting / Permitted overhung load F_{Ra} [N] [1)]	Service factor / Service factor f_B	Type / Model
4.0kW					
288	133	4.93	5680	2.2	JRESR67SS112-4P JRESRF67SS112-4P
331	116	4.29	5460	2.3	
76	500	18.60	3520	0.90	JRESR57SS112-4P JRESRF57SS112-4P
85	450	16.79	3830	1.00	
96	395	14.77	3800	1.10	
102	375	13.95	3780	1.15	JRESR57SS112-4P JRESRF57SS112-4P
120	320	11.88	3710	1.25	
132	290	10.79	3660	1.35	
152	250	9.35	3580	1.45	
157	245	9.06	3590	1.55	
178	215	7.97	3500	1.65	
189	205	7.53	3470	1.75	
222	172	6.41	3350	1.95	
244	157	5.82	3280	2.0	
281	136	5.05	3180	2.3	
323	118	4.39	3070	2.4	
140	275	10.15	1960	0.85	JRESR47SS112-4P JRESRF47SS112-4P
157	245	9.07	2350	0.90	
177	215	8.01	2640	0.95	JRESR47SS112-4P JRESRF47SS112-4P
204	187	6.96	2480	0.85	
237	161	6.00	2430	0.95	
252	152	5.64	2410	1.00	
293	131	4.85	2350	1.15	
327	117	4.34	2300	1.25	
371	103	3.83	2250	1.40	
176	215	16.22	2640	1.25	JRESR47SS112-2P JRESRF47SS112-2P
196	195	14.56	2600	1.35	
228	168	12.54	2540	1.50	
242	158	11.79	2510	1.55	
282	136	10.15	2440	1.70	
315	121	9.07	2390	1.80	
357	107	8.01	2320	1.90	
369	104	7.76	2250	1.55	
411	93	6.96	2200	1.70	
477	80	6.00	2130	1.95	
507	75	5.64	2100	2.1	
589	65	4.85	2020	2.3	
660	58	4.34	1970	2.5	
746	51	3.83	1910	2.8	
5.5kW					
91	580	15.79	6610	0.95	JRESR67SS132-4P JRESRF67SS132-4P
96	550	14.91	6900	1.00	
113	465	12.70	6810	1.10	
124	425	11.54	6690	1.20	
143	365	10.00	6500	1.30	
164	320	8.70	6310	1.40	
183	285	7.79	6180	1.35	
194	270	7.36	6100	1.35	

EURN000000_005

Uit-gaand toerental	Uit-gaand koppel	Over-brengings-verhou-ding	Toelaat-bare radiale belasting	Service factor	Type
Output speed	Output torque	Ratio	Permitted overhung load	Service factor	Model
n_a	T_a	i	F_{Ra} 1)	f_B	
[r/min]	[N · m]		[N]		
5.5kW					
228	230	6.27	5860	1.45	
251	210	5.70	5720	1.50	JRESR67SS132-4P
290	181	4.93	5510	1.60	JRESRF67SS132-4P
333	158	4.29	5310	1.70	
331	159	8.70	5300	2.8	
369	142	7.79	5160	2.7	
391	134	7.36	5080	2.8	
460	114	6.27	4860	2.9	JRESR67SS132-2P
506	104	5.70	4730	3.0	JRESRF67SS132-2P
584	90	4.93	4540	3.2	
671	78	4.29	4350	3.5	
97	545	14.77	1730	0.80	
103	510	13.95	2070	0.85	JRESR57SS132-4P
120	435	11.88	2900	0.95	JRESRF57SS132-4P
132	395	10.79	3270	1.00	
153	345	9.35	3240	1.10	
179	295	7.97	3220	1.20	
190	275	7.53	3200	1.25	JRESR57SS132-4P
223	235	6.41	3120	1.40	JRESRF57SS132-4P
246	215	5.82	3080	1.50	
283	185	5.05	3000	1.65	
326	161	4.39	2920	1.75	
308	171	9.35	2930	2.2	
361	145	7.97	2850	2.4	
383	137	7.53	2820	2.6	JRESR57SS132-2P
449	117	6.41	2720	2.9	JRESRF57SS132-2P
494	106	5.82	2660	3.0	
571	92	5.05	2560	3.3	
656	80	4.39	2470	3.5	
295	178	4.85	1870	0.85	JRESR47SS132-4P
330	159	4.34	2110	0.90	JRESRF47SS132-4P
373	141	3.83	2080	1.00	
230	230	12.54	1730	1.10	
244	215	11.79	1910	1.15	
284	185	10.15	2250	1.25	
318	165	9.07	2220	1.35	
359	146	8.01	2170	1.40	JRESR47SS132-2P
480	109	6.00	2000	1.45	JRESRF47SS132-2P
511	103	5.64	1970	1.50	
593	89	4.85	1920	1.70	
664	79	4.34	1870	1.85	
752	70	3.83	1820	2.1	
7.5kW					
113	635	12.70	4240	0.80	
124	580	11.54	4860	0.85	
143	500	10.00	5620	0.95	JRESR67SS132-4P
164	435	8.70	5930	1.00	JRESRF67SS132-4P
183	390	7.79	5500	0.95	

Uit-gaand toerental	Uit-gaand koppel	Over-brengings-verhou-ding	Toelaat-bare radiale belasting	Service factor	Type
Output speed	Output torque	Ratio	Permitted overhung load	Service factor	Model
n_a	T_a	i	F_{Ra} 1)	f_B	
[r/min]	[N · m]		[N]		
7.5kW					
194	370	7.36	5720	1.00	
228	315	6.27	5600	1.05	JRESR67SS132-4P
251	285	5.70	5480	1.10	JRESRF67SS132-4P
290	245	4.93	5300	1.15	
333	215	4.29	5130	1.25	
179	400	7.97	980	0.90	
190	375	7.53	1280	0.95	
223	320	6.41	2020	1.05	JRESR57SS132-4P
246	290	5.82	2380	1.10	JRESRF57SS132-4P
283	255	5.05	2760	1.20	
326	220	4.39	2710	1.25	
196	365	14.77	2580	1.20	
208	345	13.95	2780	1.25	
244	295	11.88	2780	1.40	
269	265	10.79	2750	1.45	
310	230	9.35	2710	1.60	
364	197	7.97	2670	1.80	JRESR57SS132-2P
385	186	7.53	2640	1.90	JRESRF57SS132-2P
452	158	6.41	2570	2.1	
498	144	5.82	2520	2.2	
575	125	5.05	2440	2.5	
660	108	4.39	2370	2.6	

EURN000000_005

2.1.4 Afmetingen / Installation dimensions

JRESR37..~JRESR67..

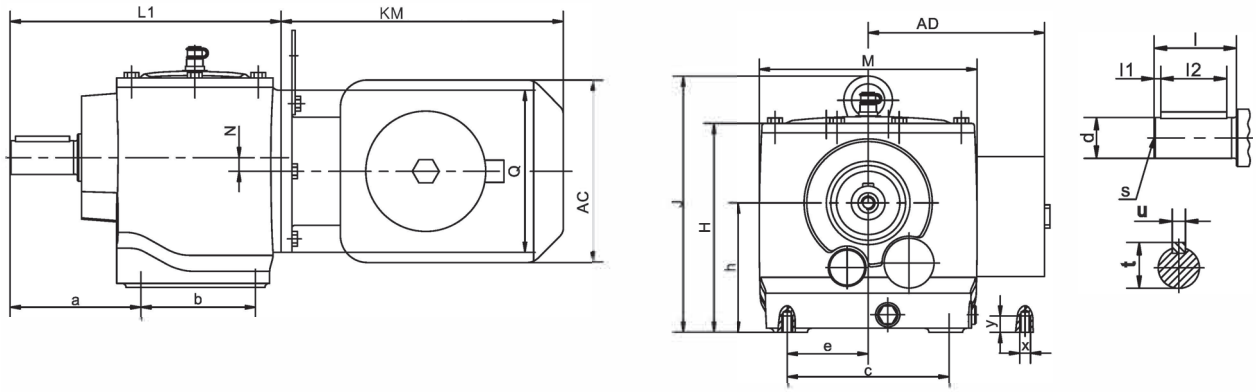

JRESRF37..~JRESRF67..

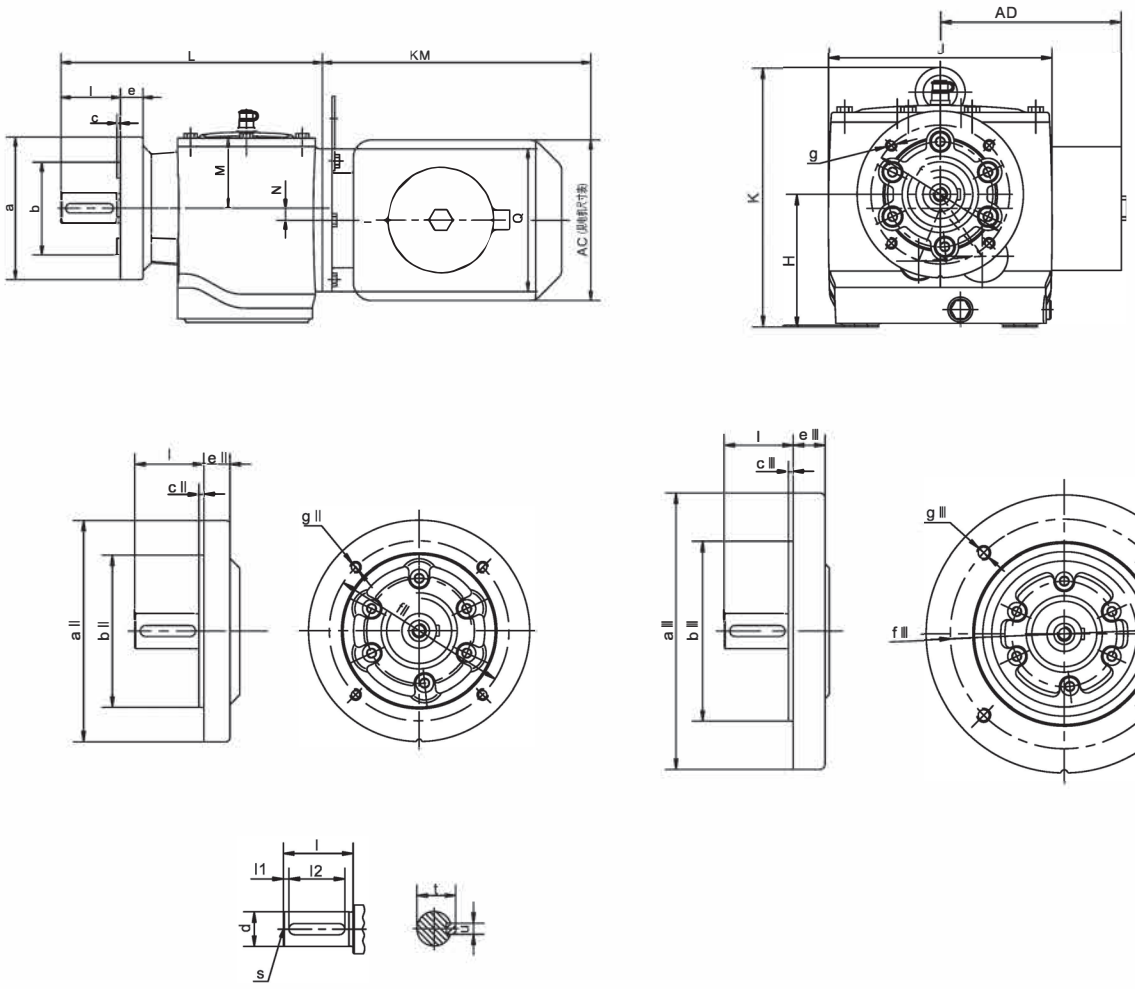

JRESR rechte reductoren / Helical Gear motors

Model	a b	c e	h H J	N	Q	X Y	L1 M	Output shaft - Uitgaande as				
								d	l	l 1 l 2	s	t u
JRESR37 ..	97 85	60 120	96 155 178	10.1	120	M8 12	201 162	25k6	50	3.5 40	M10	28 8
JRESR47 ..	120 97	150 75	115 187 220	14	160	M10 19	235 178	30k6	60	3.5 50	M10	33 8
JRESR57 ..	133 95	180 90	115 187 223	11.2	160	M10 19	257 215	35k6	70	7 56	M12	38 10
JRESR67 ..	100 110	185 92.5	130 212 243	20.7	160	M12 22	280 225	35k6	70	7 56	M12	38 10

JRESRF rechte reductoren met flensmontage/ Helical Gear motors with flange installation

Model	a I a II a III	b I b II b III	c I c II c III	e I e II e III	f I f II f III	g I g II g III	H K M	J L N	Q	Output shaft - Uitgaande as				
										d	l	l 1 l 2	s	t u
JRESRF37 ..	120 160 200	80j6 110j6 130j6	3 3.5 3.5	19 19 23	100 130 165	M8x12 M8x2 M10x15	96 178 59	162 220 10.1	120	25k6	50	4 40	M10	28 8
JRESRF47 ..	140 160 200	95j6 110j6 130j6	3 3.5 3.5	19 19 23	115 130 165	M8x12 M8x2 M10x15	115 220 72	178 250 14	160	30k6	60	3.5 50	M10	33 8
JRESRF57 ..	160 200 250	110j6 130j6 180j6	3.5 3.5 4	19 23 28	130 165 215	M8x12 M10x15 M12x18	115 223 72	215 273 11.2	160	35k6	70	7 56	M12	38 10
JRESRF67 ..	200 250	130j6 180j6	3.5 4	23 28	165 215	M10x15 M12x18	130 243 82	225 296 20.7	160	35k6	70	7 56	M12	38 10

EURN000000_005

2.2 RVS JRESK haakse kegeltandwielreductoren / CRES JRESK Helical Bevel Gear motors

2.2.1 OnderdeOnderdelenlijst / Partslist

1	RVS motor	CRES motor
2	Behuizing	Gear case
3	Ontluchtings-plug	Breather plug
4	Tandwiel ingaande trap	Input gear
5	Lager	Bearing

6	Kegeltandwiel	Bevel gear
7	Bout	Bolt
8	Deksel	Gearcase cover
9	Plug	Plug
10	Uitgaande as	Output shaft
11	Spie	Key
12	Tandwiel ingaande trap	Input gear
13	Lager	Bearing
14	Keerring	Seal
15	Kegeltandwiel	Bevel gear
16	Rondsel as	Gear shaft
17	Lager	Bearing
18	Blinddop	Closing cover

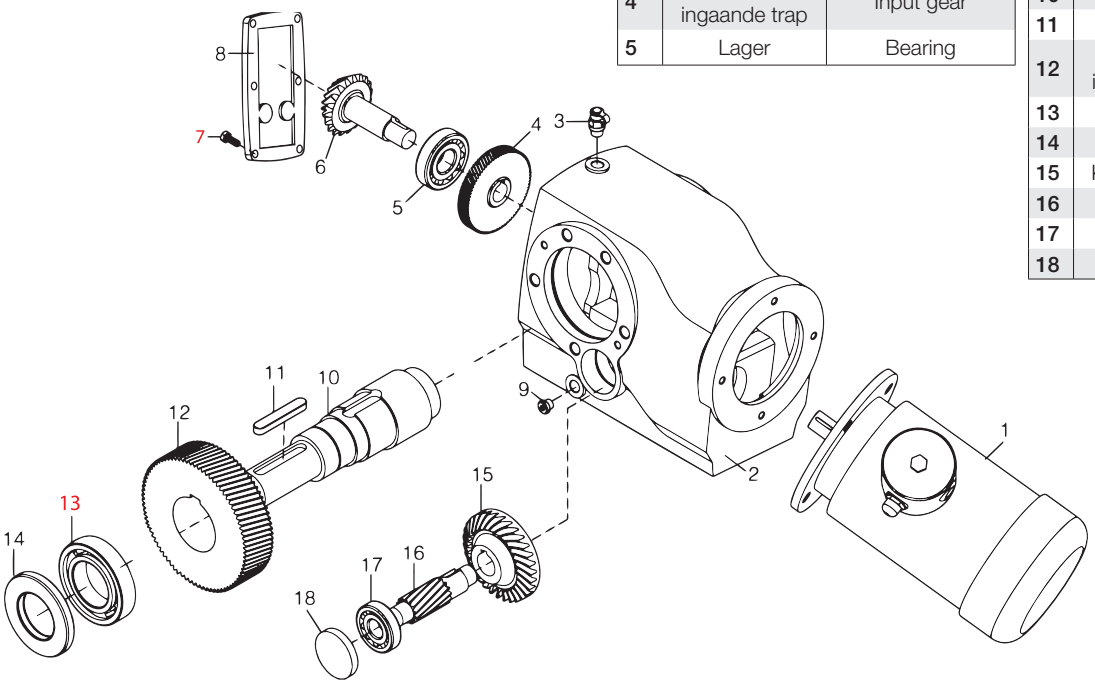

2.2.2 Product Codering / Product Coding

J	RESK	A	67	SS90	– 4P	– 1.5	– 76.37	– B	– 180°
1	2	3	4	5	6	7	8	9	10

1

Fabrikantscode

Manufacturer code

2

Serie code
Roestvaststalen kegeltandwielkast voor de voedingsmiddelenindustrie

Model code
CRES bevel gear reducer for the food and beverage industry

3

Bouwvorm
Geen code – voetmontage
A – holle as montage

Assembly type
No code-loot mounting
A – Hollow shaft mounting

4

Bouwgrootte / Size
67

5

Type roestvaststalen elektromotor
Bouwgrootte: 90

Stainless steel motor code
Size: 90

6

Aantal polen / Number of poles
4 polig

7

Motorvermogen / Motor power
1.5 kw

8

Overbrengingsverhouding / Gear ratio
76.37

9

Zijde van de as
A – linker uitgaande as
B – rechter uitgaande as
AB – dubbele uitgaande as

Output side of the shaft
A – left shaft output
B – right shaft output
AB - double output shaft

10

Montagepositie klemmenkast
Terminal box position
0° graden / degrees
90° graden / degrees
180° graden / degrees
270° graden / degrees

EURN000000_005

2.2.3 Selectie table / Selection table

Uit-gaand toerental	Uit-gaand koppel	Over-brengings-verhou-ding	Toelaat-bare radiale belasting	Service factor	Type
Output speed	Output torque	Ratio	Permitted overhung load	Service factor	Model
n_a	T_a	i	F_{Ra} 1)	f_B	
[r/min]	[N · m]		[N]		
0.18kW					
6.0	285	144.79	13000	2.9	
7.0	245	123.54	13000	3.4	JRESK67SS71-6P
8.1	215	108.03	13000	3.8	JRESKA67SS71-6P
8.5	205	102.62	13000	4.0	
9.1	189	144.79	13000	4.3	
11	161	123.54	13000	5.1	JRESK67SS63-4P
12	141	108.03	13000	5.8	JRESKA67SS63-4P
6.0	285	145.14	9340	2.1	
7.0	245	123.85	9480	2.5	
8.0	215	108.29	9590	2.8	JRESK57SS71-6P
8.5	205	102.88	9620	3.0	JRESKA57SS71-6P
9.6	178	90.26	9700	3.4	
9.1	189	145.14	9670	3.2	
11	161	123.85	9750	3.7	
12	141	108.29	9810	4.3	JRESK57SS63-4P
13	134	102.88	9830	4.5	JRESKA57SS63-4P
15	118	90.26	9880	5.1	
17	100	76.56	9920	6.0	
6.6	260	131.87	7380	1.55	
7.2	240	121.48	7530	1.65	
8.3	205	104.37	7740	1.95	JRESK47SS71-6P
9.6	180	90.86	7880	2.2	JRESKA47SS71-6P
10	168	85.12	7930	2.4	
10	172	131.87	7910	2.3	
11	158	121.48	7970	2.5	
13	136	104.37	8060	2.9	JRESK47SS71-4P
15	118	90.86	8120	3.4	JRESKA47SS71-4P
16	111	85.12	8140	3.6	
8.2	210	106.38	5520	0.95	
8.9	193	97.81	5710	1.05	JRESK37SS71-6P
10	165	83.69	5990	1.20	JRESKA37SS71-6P
12	143	72.54	6170	1.40	
12	139	106.38	6210	1.45	
14	127	97.81	6280	1.55	
16	109	83.69	6400	1.85	
18	95	72.54	6470	2.1	
19	88	67.80	6500	2.3	
23	76	58.60	6280	2.6	JRESK37SS63-4P
27	65	49.79	6010	3.1	JRESKA37SS63-4P
30	58	44.46	5830	3.5	
35	49	37.97	5580	4.1	
37	46	35.57	5480	4.3	
44	39	29.96	5220	5.1	
46	38	28.83	5160	5.3	
53	33	24.99	4950	6.2	
57	30	23.36	4850	6.4	JRESK37SS63-4P
65	26	20.19	4650	7.0	JRESKA37SS63-4P
77	22	17.15	4430	8.1	
86	20	15.31	4280	8.8	

Uit-gaand toerental	Uit-gaand koppel	Over-brengings-verhou-ding	Toelaat-bare radiale belasting	Service factor	Type
Output speed	Output torque	Ratio	Permitted overhung load	Service factor	Model
n_a	T_a	i	F_{Ra} 1)	f_B	
[r/min]	[N · m]		[N]		
0.18kW					
101	17	13.08	4080	9.7	
109	16	12.14	3980	10	JRESK37SS63-4P
126	14	10.49	3810	12	JRESKA37SS63-4P
148	12	8.91	3620	14	
166	10	7.96	3490	15	
0.25kW					
6.1	395	144.79	12800	2.1	
7.1	335	123.54	13000	2.5	JRESK67SS71-6P
8.1	295	108.03	13000	2.8	JRESKA67SS71-6P
8.6	280	102.62	13000	3.0	
9.0	265	144.79	13000	3.1	
11	225	123.54	13000	3.6	JRESK67SS71-4P
12	198	108.03	13000	4.1	JRESKA67SS71-4P
13	189	102.62	13000	4.3	
6.1	395	145.14	8910	1.50	
7.1	335	123.85	9150	1.80	
8.1	295	108.29	9310	2.0	JRESK57SS71-6P
8.6	280	102.88	9360	2.2	JRESKA57SS71-6P
9.8	245	90.26	9480	2.5	
11	210	76.56	9610	2.9	
9.0	265	145.14	9410	2.2	
11	225	123.85	9540	2.6	
12	199	108.29	9640	3.0	JRESK57SS71-4P
13	189	102.88	9670	3.2	JRESKA57SS71-4P
14	166	90.26	9740	3.6	
17	141	76.56	9810	4.3	
6.7	360	131.87	6470	1.10	
7.2	330	121.48	6780	1.20	
8.4	285	104.73	7210	1.40	JRESK47SS71-6P
9.7	245	90.86	7480	1.60	JRESKA47SS71-6P
10	230	85.12	7590	1.75	
9.9	240	131.87	7510	1.65	
11	225	121.48	7640	1.80	
12	192	104.37	7820	2.1	JRESK47SS71-4P
14	167	90.86	7930	2.4	JRESKA47SS71-4P
15	156	85.12	7980	2.6	
11	225	83.69	5300	0.90	
12	197	72.54	5680	1.00	
13	184	67.80	5810	1.10	JRESK37SS71-6P
15	159	58.60	6050	1.25	JRESKA37SS71-6P
18	135	49.79	6230	1.50	
12	195	106.38	5690	1.00	
13	180	97.81	5860	1.10	
16	154	83.69	6090	1.30	JRESK37SS71-4P
18	133	72.54	6250	1.50	JRESKA37SS71-4P
19	125	67.80	6230	1.60	
22	108	58.60	6030	1.85	

EURN000000_005

Uit-gaand toerental	Uit-gaand koppel	Over-brengings-verhou-ding	Toelaat-bare radiale belasting	Service factor	Type
Output speed	Output torque	Ratio	Permitted overhung load	Service factor	Model
n_a	T_a	i	F_{Ra} 1)	f_B	
[r/min]	[N · m]		[N]		
0.25kW					
26	91	49.79	5810	2.2	
29	82	44.46	5650	2.5	
34	70	37.97	5430	2.9	
37	65	35.57	5340	3.1	
43	55	29.96	5100	3.6	
45	53	28.83	5050	3.8	
52	46	24.99	4860	4.4	
56	43	23.36	4770	4.6	JRESK37SS71-4P JRESKA37SS71-4P
64	37	20.19	4580	5.0	
76	32	17.15	4370	5.7	
85	28	15.31	4230	6.2	
99	24	13.08	4030	6.9	
107	22	12.14	3940	7.2	
124	19	10.49	3780	8.3	
146	16	8.91	3590	9.8	
163	15	7.96	3470	11	
191	13	6.80	3310	12	
204	12	6.37	3240	12	
0.37kW					
7.3	485	123.54	12500	1.70	
8.3	425	108.03	12700	1.95	JRESK67SS80-6P JRESKA67SS80-6P
8.8	405	102.62	12800	2.0	
10	355	90.04	13000	2.3	
9.5	370	144.79	12900	2.2	
11	315	123.54	13000	2.6	
13	275	108.03	13000	3.0	JRESK67SS71-4P JRESKA67SS71-4P
15	230	90.04	13000	3.6	
18	196	76.37	13000	4.2	
7.3	485	123.85	8490	1.25	
8.3	425	108.29	8770	1.40	
8.8	405	102.88	8870	1.50	JRESK57SS80-6P JRESKA57SS80-6P
10	355	90.26	9070	1.70	
12	300	76.56	9280	2.0	
13	270	69.12	9390	2.2	
9.5	370	145.14	9000	1.60	
11	315	123.85	9220	1.90	
13	275	108.29	9370	2.2	
13	265	102.88	9420	2.3	JRESK57SS71-4P JRESKA57SS71-4P
15	230	90.26	9530	2.6	
18	196	76.56	9650	3.1	
20	177	69.12	9700	3.4	
8.6	410	104.37	5490	1.00	
9.9	355	90.86	6480	1.10	JRESK47SS80-6P JRESKA47SS80-6P
11	335	85.12	6730	1.20	
12	295	75.20	7100	1.35	
10	340	131.87	6690	1.20	
11	310	121.48	6960	1.30	JRESK47SS71-4P JRESKA47SS71-4P
13	265	104.37	7330	1.50	

Uit-gaand toerental	Uit-gaand koppel	Over-brengings-verhou-ding	Toelaat-bare radiale belasting	Service factor	Type
Output speed	Output torque	Ratio	Permitted overhung load	Service factor	Model
n_a	T_a	i	F_{Ra} 1)	f_B	
[r/min]	[N · m]		[N]		
0.37kW					
15	235	90.86	7580	1.70	
16	220	85.12	7670	1.85	
18	193	75.20	7810	2.1	JRESK47SS71-4P JRESKA47SS71-4P
20	179	69.84	7880	2.2	
22	162	63.30	7960	2.5	
14	250	97.81	2520	0.80	
16	215	83.69	5470	0.95	
19	186	72.54	5690	1.10	
20	174	67.80	5630	1.15	
24	150	58.60	5510	1.35	
28	128	49.79	5350	1.55	
31	114	44.46	5230	1.75	
36	97	37.97	5060	2.1	
39	91	35.57	4990	2.2	
46	77	29.96	4800	2.6	
48	74	28.83	4750	2.7	
55	64	24.99	4590	3.1	
59	60	23.36	4510	3.3	JRESK37SS71-4P JRESKA37SS71-4P
68	52	20.19	4350	3.6	
80	44	17.15	4160	4.1	
90	39	15.31	4040	4.5	
105	34	13.08	3860	4.9	
114	31	12.14	3780	5.1	
132	27	10.49	3630	6.0	
155	23	8.91	3460	7.0	
173	20	7.96	3350	7.6	
203	17	6.80	3190	8.6	
217	16	6.37	3130	8.9	
257	14	5.36	2970	10	
0.55kW					
7.3	720	123.54	11100	1.15	
8.3	630	108.03	11700	1.30	JRESK67SS80-6P JRESKA67SS80-6P
8.8	600	102.62	11900	1.35	
10	525	90.04	12300	1.55	
12	445	76.37	12600	1.85	
11	475	123.54	12500	1.70	
13	415	108.03	12800	1.95	JRESK67SS80-4P JRESKA67SS80-4P
15	350	90.04	13000	2.4	
18	295	76.37	13000	2.8	
8.3	630	108.29	7360	0.95	
8.8	600	102.88	7630	1.00	
10	525	90.26	8220	1.15	JRESK57SS80-6P JRESKA57SS80-6P
12	445	76.56	8670	1.35	
13	405	69.12	8870	1.50	
15	355	60.81	9070	1.70	
16	335	57.42	9150	1.80	
11	480	123.85	8520	1.25	JRESK57SS80-4P JRESKA57SS80-4P
13	420	108.29	8800	1.45	
13	395	102.88	8890	1.50	

EURN000000_005

Uit-gaand toerental	Uit-gaand koppel	Over-brengings-verhou-ding	Toelaat-bare radiale belasting	Service factor	Type
Output speed	Output torque	Ratio	Permitted overhung load	Service factor	Model
n_a	T_a	i	F_{Ra} 1)	f_B	
[r/min]	[N · m]		[N]		
0.55kW					
15	350	90.26	9100	1.70	JRESK57SS80-4P JRESKA57SS80-4P
18	295	76.56	9300	2.0	
20	265	69.12	9410	2.3	
22	235	60.81	9520	2.6	
24	220	57.42	9560	2.7	
13	405	104.37	5880	1.00	JRESK47SS80-4P JRESKA47SS80-4P
15	350	90.86	6550	1.15	
16	330	85.12	6790	1.20	
18	290	75.20	7150	1.40	
19	270	69.84	7310	1.50	
21	245	63.30	7500	1.65	JRESK47SS80-4P JRESKA47SS80-4P
24	220	56.83	7660	1.80	
28	189	48.95	7830	2.1	
30	178	46.03	7880	2.2	
23	225	58.60	4850	0.90	JRESK37SS80-4P JRESKA37SS80-4P
27	192	49.79	4790	1.05	
31	172	44.46	4740	1.15	
36	147	37.97	4640	1.35	
38	137	35.57	4600	1.45	
45	116	29.96	4470	1.75	
47	111	28.83	4440	1.80	
54	97	24.99	4320	2.1	
58	90	23.36	4260	2.2	
67	78	20.19	4130	2.4	
79	66	17.15	3980	2.7	JRESK37SS80-4P JRESKA37SS80-4P
89	59	15.31	3880	3.0	
104	51	13.08	3730	3.3	
112	47	12.14	3660	3.4	
130	41	10.49	3520	4.0	
153	34	8.91	3370	4.7	
171	31	7.96	3270	5.1	
200	26	6.80	3130	5.7	JRESK37SS80-4P JRESKA37SS80-4P
214	25	6.37	3070	5.9	
254	21	5.36	2920	6.8	
342	15	3.98	2680	8.1	
0.75kW					
11	640	123.54	11700	1.30	JRESK67SS80-4P JRESKA67SS80-4P
13	560	108.03	12100	1.45	
15	465	90.04	12600	1.75	
18	395	76.37	12800	2.1	JRESK67SS80-4P JRESKA67SS80-4P
20	360	68.95	13000	2.3	
23	315	60.66	13000	2.6	
24	295	57.28	13000	2.8	
11	645	123.85	7130	0.95	JRESK57SS80-4P JRESKA57SS80-4P
13	560	108.29	7940	1.05	
13	535	102.88	8160	1.10	
15	470	90.26	8570	1.30	
18	395	76.56	8890	1.50	
20	360	69.12	9060	1.65	
23	315	60.81	9230	1.90	

Uit-gaand toerental	Uit-gaand koppel	Over-brengings-verhou-ding	Toelaat-bare radiale belasting	Service factor	Type
Output speed	Output torque	Ratio	Permitted overhung load	Service factor	Model
n_a	T_a	i	F_{Ra} 1)	f_B	
[r/min]	[N · m]		[N]		
0.75kW					
24	300	57.42	9290	2.0	JRESK57SS80-4P JRESKA57SS80-4P
28	255	48.89	9450	2.4	
31	230	44.43	9530	2.6	
18	390	75.20	6060	1.00	JRESK47SS80-4P JRESKA47SS80-4P
20	365	69.84	6410	1.10	
22	330	63.30	6790	1.20	
24	295	56.83	7110	1.35	JRESK47SS80-4P JRESKA47SS80-4P
28	255	48.95	7430	1.55	
30	240	46.03	7540	1.65	
35	205	39.61	7740	1.95	
39	184	35.39	7760	2.2	
44	162	31.30	7550	2.5	
31	230	44.46	4170	0.85	JRESK37SS80-4P JRESKA37SS80-4P
36	197	37.97	4150	1.00	
39	185	35.57	4140	1.10	
46	156	29.96	4080	1.30	
48	150	28.83	4060	1.35	
55	130	24.99	3990	1.55	
59	121	23.36	3950	1.60	
68	105	20.19	3860	1.75	
80	89	17.15	3750	2.0	
90	80	15.31	3670	2.2	
105	68	13.08	3550	2.4	
114	63	12.14	3500	2.5	
132	54	10.49	3380	2.9	
155	46	8.91	3250	3.5	
173	41	7.96	3160	3.8	
203	35	6.80	3030	4.3	
217	33	6.37	2980	4.4	
257	28	5.36	2840	5.0	
347	21	3.98	2620	6.0	
1.1kW					
13	810	108.03	10400	1.00	JRESK67SS90-4P JRESKA67SS90-4P
14	770	102.62	10700	1.05	
16	675	90.04	11400	1.20	
18	575	76.37	12000	1.45	
20	515	68.95	12300	1.60	
23	455	60.66	12600	1.80	JRESK67SS90-4P JRESKA67SS90-4P
24	430	57.28	12700	1.90	
29	365	48.77	12900	2.2	
32	335	44.32	13000	2.5	
36	290	38.39	13000	2.8	
16	675	90.26	7410	0.90	JRESK57SS90-4P JRESKA57SS90-4P
18	575	76.56	7840	1.05	
20	520	69.12	8280	1.15	
23	455	60.81	8630	1.30	
24	430	57.42	8750	1.40	
29	365	48.89	9020	1.65	
32	335	44.43	9160	1.80	

EURN000000_005

Uit-gaand toerental	Uit-gaand koppel	Over-brengings-verhou-ding	Toelaat-bare radiale belasting	Service factor	Type
Output speed	Output torque	Ratio	Permitted overhung load	Service factor	Model
n_a	T_a	i	F_{Ra} 1)	f_B	
[r/min]	[N · m]		[N]		
1.1kW					
36	290	38.49	9330	2.1	JRESK57SS90-4P JRESKA57SS90-4P
39	270	35.70	9400	2.2	
46	225	30.28	9540	2.6	
51	205	27.34	9510	2.9	
58	181	24.05	9220	3.3	
62	170	22.71	9090	3.5	
72	145	19.34	8720	4.0	
80	132	17.57	8510	4.2	
92	114	15.22	8180	4.7	
106	99	13.25	7880	5.1	
117	90	11.92	7570	4.6	
124	85	11.26	7450	4.9	
146	72	9.59	7120	5.6	
161	65	8.71	6930	6.0	
186	57	7.55	6650	6.5	
213	49	6.57	6380	7.0	
298	35	4.69	5770	8.5	
25	425	56.83	3310	0.95	JRESK47SS90-4P JRESKA47SS90-4P
29	365	48.95	6360	1.10	
30	345	46.03	6610	1.15	
35	295	39.61	7090	1.35	JRESK47SS90-4P JRESKA47SS90-4P
40	265	35.39	7090	1.50	
45	235	31.30	6960	1.70	
48	220	29.32	6890	1.80	
54	194	25.91	6730	2.1	
64	164	21.81	6510	2.4	
72	147	19.58	6360	2.7	
47	225	29.96	3420	0.90	JRESK37SS90-4P JRESKA37SS90-4P
56	188	24.99	3440	1.05	
60	175	23.36	3440	1.10	
69	152	20.19	3420	1.20	
82	129	17.15	3370	1.40	
91	115	15.31	3330	1.50	
107	98	13.08	3260	1.70	
115	91	12.14	3220	1.75	
133	79	10.49	3140	2.0	JRESK37SS90-4P JRESKA37SS90-4P
157	67	8.91	3040	2.4	
176	60	7.96	2970	2.6	
206	51	6.80	2870	2.9	
220	48	6.37	2830	3.0	
261	40	5.36	2720	3.5	
352	30	3.98	2520	4.2	
1.5kW					
16	910	90.04	9370	0.90	JRESK67SS90-4P JRESKA67SS90-4P
18	775	76.37	10700	1.05	
20	700	68.95	11300	1.15	
23	615	60.66	11800	1.35	
25	580	57.28	12000	1.40	
29	495	48.77	12400	1.65	
32	450	44.32	12600	1.80	JRESK67SS90-4P JRESKA67SS90-4P
37	390	38.39	12800	2.1	
40	360	35.62	12900	2.3	

Uit-gaand toerental	Uit-gaand koppel	Over-brengings-verhou-ding	Toelaat-bare radiale belasting	Service factor	Type
Output speed	Output torque	Ratio	Permitted overhung load	Service factor	Model
n_a	T_a	i	F_{Ra} 1)	f_B	
[r/min]	[N · m]		[N]		
1.5kW					
47	305	30.22	13000	2.7	JRESK67SS90-4P JRESKA67SS90-4P
52	275	27.28	13000	3.0	
59	245	24.00	13000	3.3	
23	620	60.81	7480	0.95	JRESK57SS90-4P JRESKA57SS90-4P
25	585	57.42	7770	1.05	
29	495	48.89	8430	1.20	
32	450	44.43	8650	1.35	
37	390	38.49	8920	1.55	JRESK57SS90-4P JRESKA57SS90-4P
39	365	35.70	9040	1.65	
47	310	30.28	9190	1.95	
52	280	27.34	9010	2.2	
59	245	24.05	8780	2.5	
62	230	22.71	8670	2.6	
73	196	19.34	8360	2.9	
36	400	39.61	5890	1.00	JRESK47SS90-4P JRESKA47SS90-4P
40	360	35.39	6360	1.10	
45	320	31.30	6310	1.25	
48	300	29.32	6270	1.35	JRESK47SS90-4P JRESKA47SS90-4P
54	265	25.91	6190	1.50	
65	220	21.81	6050	1.80	
72	199	19.58	5950	2.0	
84	171	16.86	5800	2.2	
89	161	15.86	5730	2.4	
103	139	13.65	5560	2.6	
116	124	12.19	5430	2.8	
120	120	11.77	5340	2.3	
60	235	23.36	2860	0.80	JRESK37SS90-4P JRESKA37SS90-4P
70	205	20.19	2920	0.90	
82	174	17.15	2940	1.05	
92	156	15.31	2950	1.10	
108	133	13.08	2930	1.25	
116	123	12.14	2920	1.30	
134	107	10.49	2880	1.50	
158	91	8.91	2820	1.75	
177	81	7.96	2770	1.90	
207	69	6.80	2700	2.2	
221	65	6.37	2670	2.2	
263	55	5.36	2580	2.6	
354	40	3.98	2420	31	
2.2kW					
23	900	60.66	9490	0.90	JRESK67SS100-4P JRESKA67SS100-4P
25	850	57.28	10000	0.95	
29	725	48.77	11100	1.15	
32	660	44.32	11500	1.25	
37	570	38.39	12100	1.40	
40	530	35.62	12300	1.55	
47	450	30.22	12600	1.80	
52	405	27.28	12800	2.0	JRESK67SS100-4P JRESKA67SS100-4P
59	360	24.00	13000	2.2	
62	340	22.66	13000	2.3	
73	285	19.30	13000	2.6	

EURN000000_005

Uit-gaand toerental	Uit-gaand koppel	Over-brengings-verhou-ding	Toelaat-bare radiale belasting	Service factor	Type
Output speed	Output torque	Ratio	Permitted overhung load	Service factor	Model
n_a	T_a	i	F_{Ra} [1)]	f_B	
[r/min]	[N · m]		[N]		
2.2kW					
80	260	17.54	13000	2.8	JRESK67SS100-4P JRESKA67SS100-4P
93	225	15.19	13000	3.1	
107	197	13.22	13000	3.4	
113	186	12.48	13000	2.9	
133	158	10.63	13000	3.2	
146	144	9.66	13000	3.3	
169	125	8.37	13000	3.5	
194	109	7.28	12700	3.9	
271	78	5.2	11700	4.5	
32	660	44.43	5100	0.90	JRESK57SS100-4P JRESKA57SS100-4P
37	575	38.49	7850	1.05	
39	530	35.70	8180	1.15	
47	450	30.28	8250	1.35	
52	405	27.34	8160	1.45	JRESK57SS100-4P JRESKA57SS100-4P
59	360	24.05	8030	1.65	
62	340	22.71	7970	1.75	
73	290	19.34	7760	2.0	
80	260	17.57	7630	2.1	
93	225	15.22	7430	2.4	
106	197	13.25	7220	2.6	
118	178	11.92	6890	2.3	
125	168	11.26	6810	2.5	
54	385	25.91	5260	1.05	JRESK47SS100-4P JRESKA47SS100-4P
65	325	21.81	5260	1.25	
72	290	19.58	5240	1.35	
84	250	16.86	5190	1.50	JRESK47SS100-4P JRESKA47SS100-4P
89	235	15.86	5160	1.60	
103	205	13.65	5070	1.75	
116	182	12.19	4990	1.95	
120	175	11.77	4890	1.60	JRESK47SS100-4P JRESKA47SS100-4P
133	157	10.56	4810	1.80	
155	136	9.10	4690	2.1	
108	195	13.08	2370	0.85	JRESK37SS100-4P JRESKA37SS100-4P
134	156	10.49	2430	1.00	
158	133	8.91	2440	1.20	
177	119	7.96	2430	1.30	
207	101	6.80	2410	1.50	
221	95	6.37	2400	1.55	
263	80	5.36	2350	1.75	
354	59	3.98	2250	2.1	
3.0kW					
32	910	44.32	9450	0.90	JRESK67SS100-4P JRESKA67SS100-4P
36	785	38.39	10600	1.00	
39	730	35.62	11100	1.15	
46	620	30.22	11800	1.35	
51	560	27.28	12100	1.45	
58	490	24.00	12500	1.65	
62	465	22.66	12600	1.70	JRESK67SS100-4P JRESKA67SS100-4P
73	395	19.30	12800	1.95	
80	360	17.54	13000	2.1	

Uit-gaand toerental	Uit-gaand koppel	Over-brengings-verhou-ding	Toelaat-bare radiale belasting	Service factor	Type
Output speed	Output torque	Ratio	Permitted overhung load	Service factor	Model
n_a	T_a	i	F_{Ra} [1)]	f_B	
[r/min]	[N · m]		[N]		
3.0kW					
92	310	15.19	13000	2.3	JRESK67SS100-4P JRESKA67SS100-4P
106	270	13.22	13000	2.5	
112	255	12.48	13000	2.1	
132	220	10.63	13000	2.3	
145	198	9.66	13000	2.4	
46	620	30.28	7180	0.95	JRESK57SS100-4P JRESKA57SS100-4P
51	560	27.34	7190	1.05	
58	490	24.05	7180	1.20	
62	465	22.71	7160	1.30	JRESK57SS100-4P JRESKA57SS100-4P
72	395	19.34	7080	1.45	
80	360	17.57	7020	1.55	
92	310	15.22	6890	1.70	
106	270	13.25	6750	1.90	
117	245	11.92	6420	1.70	
124	230	11.26	6370	1.80	
146	196	9.59	6200	2.1	
161	178	8.71	6090	2.2	
186	154	7.55	5920	2.4	
213	134	6.57	5750	2.6	
298	96	4.69	5320	3.1	
72	400	19.58	4430	1.00	JRESK47SS100-4P JRESKA47SS100-4P
83	345	16.86	4490	1.10	
88	325	15.86	4500	1.15	
103	280	13.65	4510	1.30	
115	250	12.19	4490	1.40	
119	240	11.77	4370	1.15	
133	215	10.56	4350	1.30	
154	186	9.10	4290	1.50	JRESK47SS100-4P JRESKA47SS100-4P
164	175	8.56	4270	1.55	
190	151	7.36	4190	1.65	
213	135	6.58	4120	1.80	
241	119	5.81	4030	1.95	
302	95	4.64	3860	2.2	
157	182	8.91	2000	0.90	JRESK37SS100-4P JRESKA37SS100-4P
176	163	7.96	2040	0.95	
206	139	6.80	2080	1.10	
220	130	6.37	2080	1.10	
261	110	5.36	2090	1.30	
352	81	3.98	2050	1.55	
4.0kW					
47	810	30.22	10400	1.00	JRESK67SS112-4P JRESKA67SS112-4P
52	735	27.28	11000	1.10	
59	645	24.00	11600	1.25	
63	610	22.66	11800	1.30	
74	520	19.30	12300	1.45	JRESK67SS112-4P JRESKA67SS112-4P
81	470	17.54	12500	1.55	
94	410	15.19	12800	1.70	
107	355	13.22	13000	1.90	
114	335	12.48	13000	1.60	
134	285	10.63	13000	1.75	
147	260	9.66	12900	1.85	

EURN000000_005

Uit-gaand toerental	Uit-gaand koppel	Over-brengings-verhou-ding	Toelaat-bare radiale belasting	Service factor	Type
Output speed	Output torque	Ratio	Permitted overhung load	Service factor	Model
n_a	T_a	i	F_{Ra} 1)	f_B	
[r/min]	[N · m]		[N]		
4.0kW					
170	225	8.37	12500	1.95	JRESK67SS112-4P
195	196	7.28	12100	2.1	JRESKA67SS112-4P
273	140	5.20	11200	2.5	
59	645	24.05	6120	0.95	
63	610	22.71	6160	1.00	
73	520	19.34	6220	1.10	
81	475	17.57	6230	1.15	
93	410	15.22	6210	1.30	
107	355	13.25	6510	1.45	
119	320	11.92	5810	1.30	JRESK57SS112-4P
126	305	11.26	5790	1.35	JRESKA57SS112-4P
148	260	9.59	5700	1.55	
163	235	8.71	5640	1.65	
188	205	7.55	5530	1.80	
216	177	6.57	5400	1.95	
303	126	4.69	5070	2.4	
5.5kW					
60	880	24.00	9720	0.90	
63	830	22.66	10200	0.95	
74	710	19.30	11200	1.05	JRESK67SS132-4P
82	645	17.54	11600	1.15	JRESKA67SS132-4P
94	560	15.19	12100	1.25	
108	485	13.22	12500	1.40	
115	460	12.48	12600	1.15	
135	390	10.63	12400	1.30	
148	355	9.66	12200	1.35	JRESK67SS132-4P
171	305	8.37	11900	1.45	JRESKA67SS132-4P
196	265	7.28	11600	1.55	
275	191	5.20	10800	1.85	

EURN000000_005

2.2.4 Afmetingen / Dimensions

JRESK37..~JRESK67..

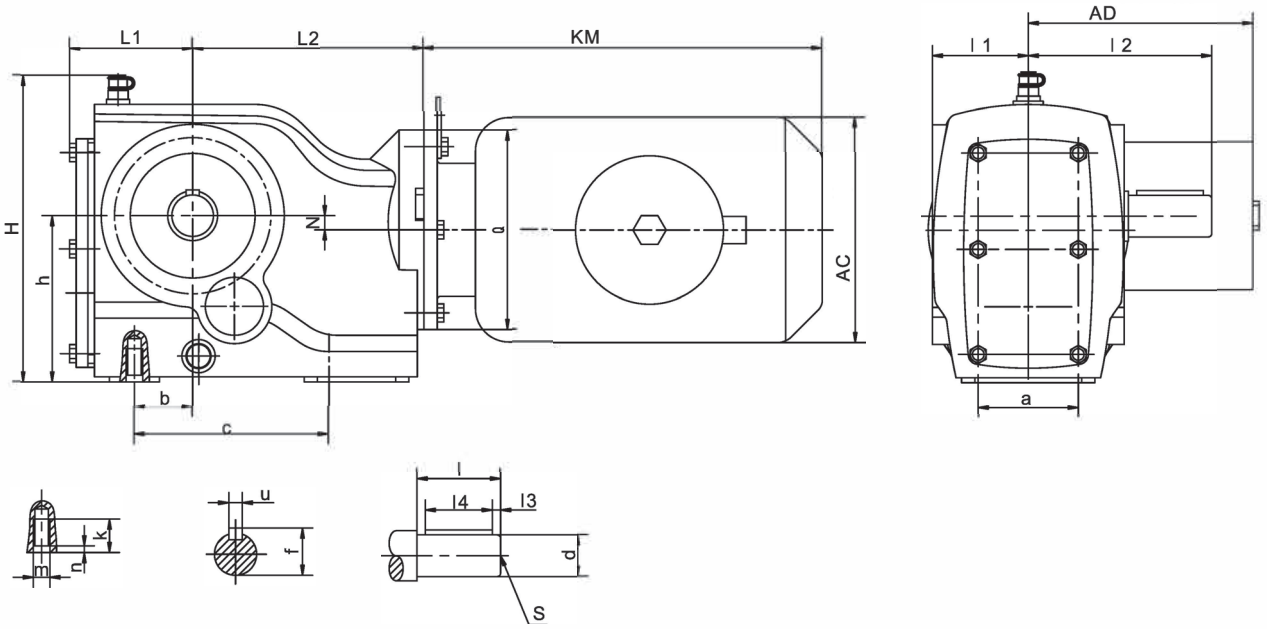

JRESKA37..~JRESKA67..

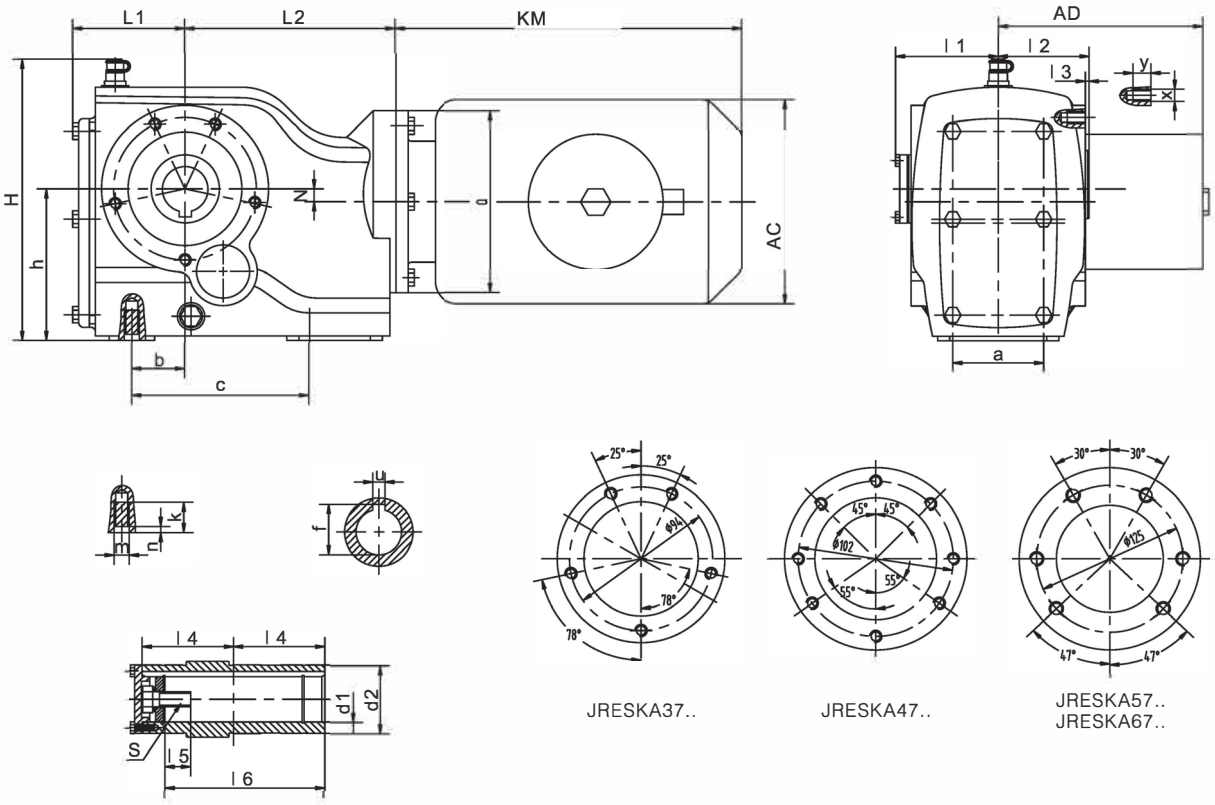

JRESKA37..

JRESKA47..

JRESKA57..
JRESKA67..

EURN000000_005

JRESK haakse kegeltandwielreductoren / Helical Bevel Gear motors

Model	a b c	k m n	h H	N	Q	L1 L2	| 1 | 2	Output shaft - Uitgaande as				
								d	|	| 3 | 4	s	t u
JRESK37. .	60 35 117	20 M10 4	100 187	8.5	120	75 139	57.5 110	25k6	50	5 40	M10	28 8
JRESK47. .	70 40 140	20 M10 4	112 205	7.2	160	77 166	72 135	30k6	60	3.5 50	M10	33 8
JRESK57. .	88 47 152	25 M12 5	132 235	13.1	160	96 173	80 153	35k6	70	7 56	M12	38 10
JRESK67. .	88 70 152	27 M12 5	140 246	20	160	95 179	86.5 171	35k6	70	5 70	M16	43 12

JRESKA haakse kegeltandwielreductoren met holle as montage / Helical Bevel Gear motors with hollow shaft mounting

Model	a b c	k m n	h H	N Q	X Y	L1 L2	| 1 | 2 | 3	Output shaft - Uitgaande as				
								d1 d2	| 5	| 4 | 6	s	t u
JRESKA37 ..	60 35 117	20 M10 4	100 187	8.5	M8 12	75 139	68 60 2.5	30H7 45	17	60 105	M10	33.3 8
JRESKA47 ..	70 40 140	20 M10 4	112 205	7.2	M8 12	77 166	82 75 3	35H7 50	22	75 132	M12	38.3 10
JRESKA57 ..	88 47 152	25 M12 5	132 235	13.1	M12 20	96 173	91 83 3	40H7 55	29	83 142	M16	43.3 12
JRESKA67 ..	88 70 152	27 M12 5	140 246	20	M12 20	95 179	98 90 3.5	40H7 55	29	90 156	M16	43.3 12

EURN000000_005

2.3 RVS JRESSD wormwielreductoren / CRES JRESSD Worm Gear Motor

2.3.1 Onderdelenlijst / Partslist

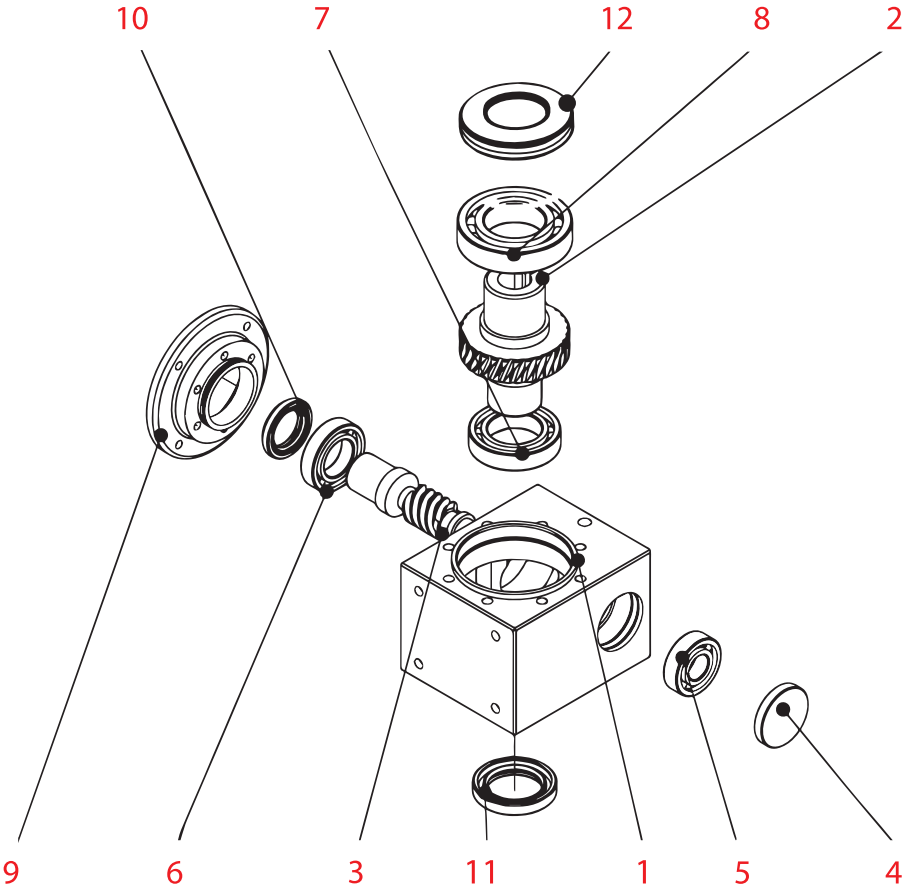

1	Behuizing	Gear case
2	Wormwiel	Worm wheel
3	Worm as	Worm shaft
4	Blinddop	Closing cover
5	Lager	Bearing
6	Lager	Bearing
7	Lager	Bearing
8	Lager	Bearing
9	Ingaande flens	Input flange
10	Keerring	Seal
11	Keerring	Seal
12	Keerring	Seal

2.3.2 Product Codering / Product Coding

J	RESS	D	63	–	100	–	E	–	71B14
1	2	3	4		5		6		7

1

Fabrikantscode

Enterprise code

2

Serie code
RVS wormwielreductor
voor de voedingsmiddelenindustrie

Manufacturer code
CRES worm gear reducer for food

3

Bouwvorm
D – met ingaande IEC motorflens

Assembly type
D – with IEC input flange

4

Bouwgrootte / Size
63

5

Overbrengingsverhouding / Ratio
100

6

Optionele onderdelen
A – Enkele uitgaande insteekas
B – Dubbele uitgaande insteekas
E – Reactie arm
F – Met flens

Optional parts
A – Single output shaft
B – Double output shaft
E – With torque arm
F – With flange

7

IEC motorflens type
B5 – grote flens doorlopende boutgaten
B14 – kleine flens met draadeinden

IEC flange type
B5 – Large flange with holes
B14 – Small flange with threaded studs

EURN000000_005

2.3.3 Selectie table / Selection table

Uit-gaand toerental	Uit-gaand koppel	Over-brengings-verhou-ding	Toelaat-bare radiale belasting	Service factor	Type
Output speed	Output torque	Ratio	Permitted overhung load	Service factor	Model
n_a	T_a	i	F_{Ra} 1)	f_B	
[r/min]	[N · m]		[N]		
0.09kW					
28	19	50	2.47	2.0	JRESSD40
23.3	21	60	2.63	1.7	
17.5	26	80	2.89	1.3	
14	29	100	3.11	1.0	
0.12kW					
46.7	17.2	30	2.08	2.6	JRESSD40
35	21	40	2.29	1.9	
28	25	50	2.47	1.5	
23.3	28	60	2.63	1.3	
17.5	34	80	2.89	1.0	
14	38	100	3.11	0.8	
23.3	29	60	3.61	2.3	JRESSD50
17.5	35	80	3.97	1.9	
14	40	100	4.28	1.4	
0.18kW					
70	19	20	1.82	2.0	JRESSD40
56	23	25	1.96	1.7	
46.7	26	30	2.08	1.7	
35	32	40	2.29	1.3	
28	38	50	2.47	1.0	
23.3	43	60	2.63	0.8	
35	32	40	3.15	2.3	JRESSD50
28	39	50	3.39	1.9	
23.3	43	60	3.61	1.6	
17.5	52	80	3.97	1.2	
14	60	100	4.28	0.9	
0.25kW					
186.7	11	7.5	1.31	3.6	JRESSD40
140	14	10	1.44	2.8	
93.3	21	15	1.65	1.9	
70	27	20	1.82	1.5	
56	32	25	1.96	1.2	
46.7	36	30	2.08	1.3	
35	44	40	2.29	0.9	
28	37	50	2.47	0.8	
70	26	20	2.5	2.7	JRESSD50
56	32	25	2.69	2.2	
46.7	37	30	2.86	2.3	
35	46	40	3.15	1.7	
28	54	50	3.39	1.4	
23.3	60	60	3.61	1.1	
17.5	72	80	3.97	0.9	
28	56	50	4.44	2.4	JRESSD63
23.3	63	60	4.71	2.0	
17.5	78	80	5.19	1.6	
14	87	100	5.59	1.4	
0.37kW					
186.7	16	7.5	1.31	2.4	JRESSD40
140	21	10	1.44	1.9	
93.3	31	15	1.65	1.3	
70	39	20	1.82	1.0	

Uit-gaand toerental	Uit-gaand koppel	Over-brengings-verhou-ding	Toelaat-bare radiale belasting	Service factor	Type
Output speed	Output torque	Ratio	Permitted overhung load	Service factor	Model
n_a	T_a	i	F_{Ra} 1)	f_B	
[r/min]	[N · m]		[N]		
0.37kW					
56	47	25	1.96	0.8	JRESSD40
46.7	53	30	2.08	0.8	
140	21	10	1.98	3.3	JRESSD50
93.3	31	15	2.27	2.4	
70	40	20	2.5	1.8	
56	48	25	2.69	1.5	
46.7	55	30	2.86	1.5	
35	68	40	3.15	1.1	
28	80	50	3.39	0.9	
23.3	89	60	3.61	0.8	
35	70	40	4.12	2.1	JRESSD63
28	83	50	4.44	1.6	
23.3	94	60	4.71	1.4	
17.5	115	80	5.19	1.1	
14	129	100	5.59	0.9	
0.55kW					
186.7	25	7.5	1.8	2.9	JRESSD50
140	32	10	1.98	2.2	
93.3	46	15	2.27	1.6	
70	59	20	2.5	1.2	
56	71	25	2.69	1.0	
46.7	81	30	2.86	1.0	
35	80	40	3.15	0.9	
70	60	20	3.27	2.2	JRESSD63
56	73	25	3.52	1.8	
46.7	83	30	3.74	1.9	
35	105	40	4.12	1.4	
28	124	50	4.44	1.1	
23.3	140	60	4.71	0.9	
0.75kW					
186.7	34	7.5	1.8	2.1	JRESSD50
140	44	10	1.98	1.6	
93.3	63	15	2.27	1.2	
70	81	20	2.5	0.9	
93.3	63	15	2.97	2.2	JRESSD63
70	83	20	3.27	1.6	
56	100	25	3.52	1.3	
46.7	114	30	3.74	1.4	
1.1kW					
186.7	49	7.5	2.35	2.6	JRESSD63
140	65	10	2.59	2.1	
93.3	93	15	2.97	1.5	
70	122	20	3.27	1.1	JRESSD63
56	146	25	3.52	0.9	
46.7	167	30	3.74	1.0	
35	165	40	3.59	0.9	
1.5kW					
186.7	67	7.5	2.35	1.9	JRESSD63
140	88	10	2.59	1.5	
93.5	127	15	2.97	1.1	
70	166	20	3.27	0.8	

EURN000000_005

2.3.4 Ingaande as / Input shaft

JRESSD40..

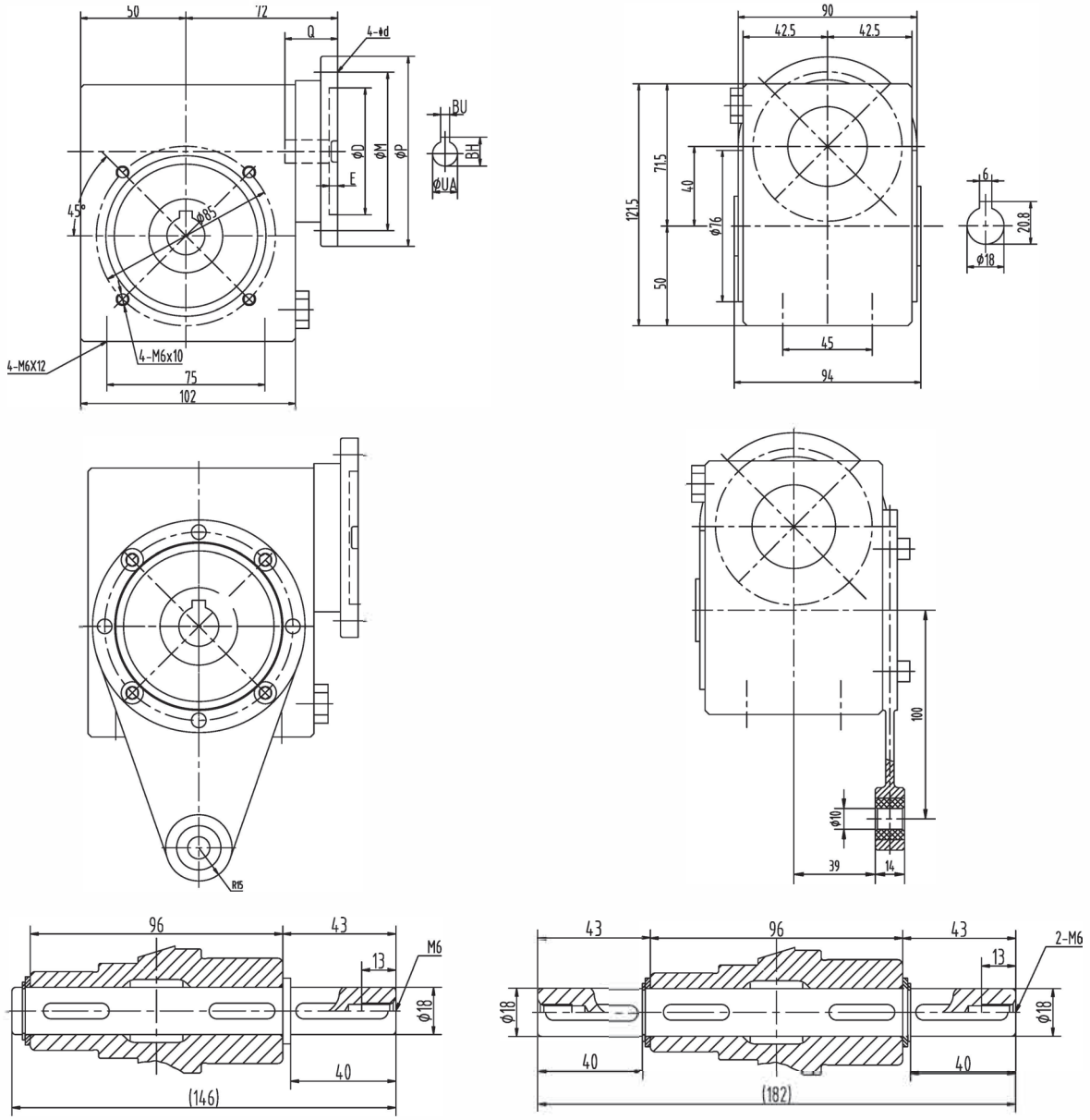

Flens specificaties / Flange specification									
Type	D	M	p	d	BH	BU	E	Q	Ingaande as / Input aperature
71B5	110	130	160	9	16.3	5	5	30	14
71B14	70	85	105	6.6	16.3	5	5	30	
63B5	95	115	140	9	12.8	4	5	23	11
63B14	60	75	90	5.5	12.8	4	5	23	

EURN000000_005

RESSD50..

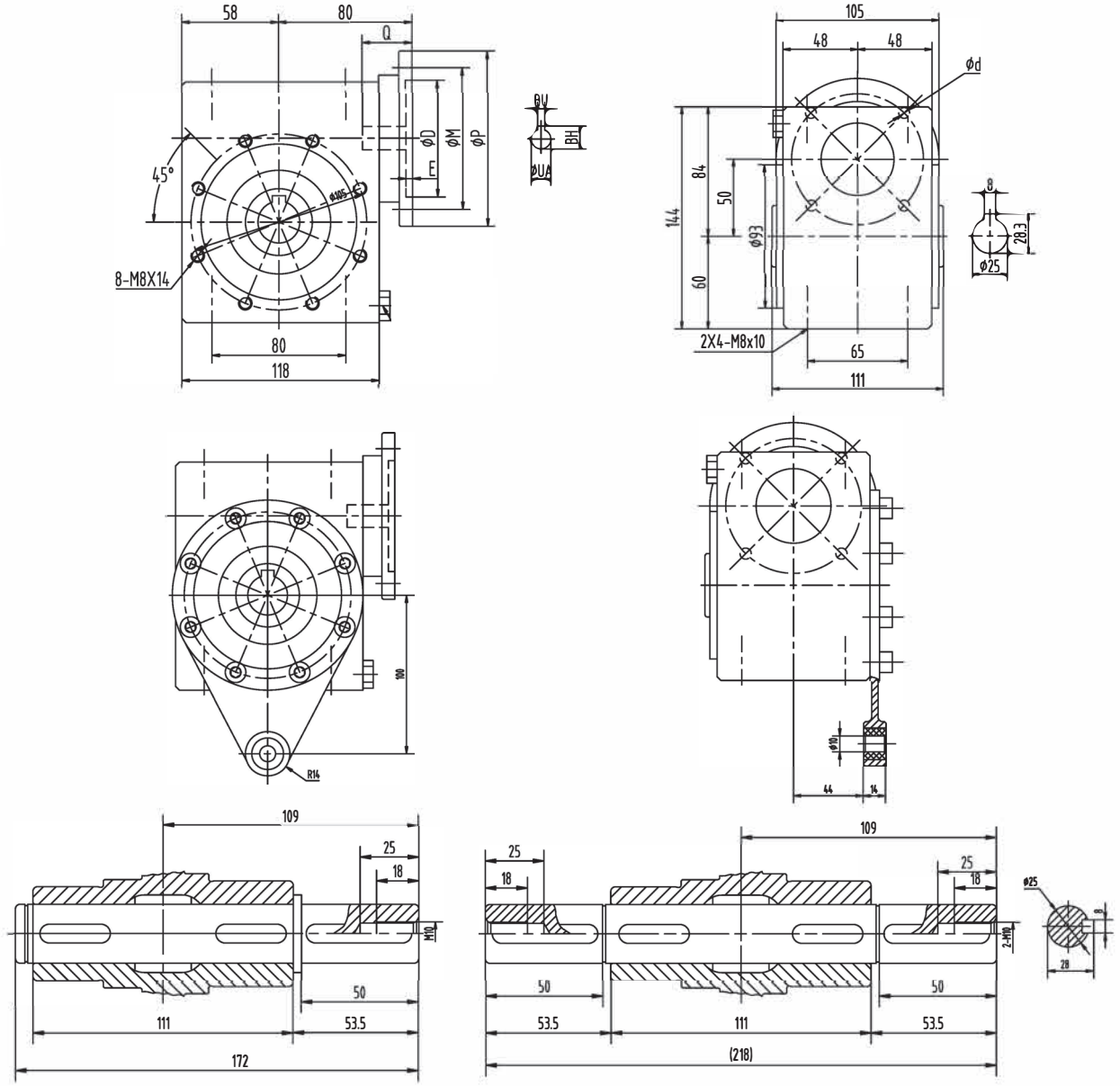

Flens specificaties / Flange specification									
Type	D	M	p	d	BH	BU	E	Q	Ingaande as / Input aperature
80B5	130	165	200	11	21.8	6	6	40	19
80B14	80	100	120	6.6	21.8	6	6	40	
71B5	10	130	160	9	16.3	5	5	30	14
71B14	70	85	105	6.6	16.3	5	5	30	
63B5	95	115	140	9	12.8	4	5	23	11
63B14	60	75	90	5.5	12.8	4	5	23	

EURN000000_005

JRESSD63..

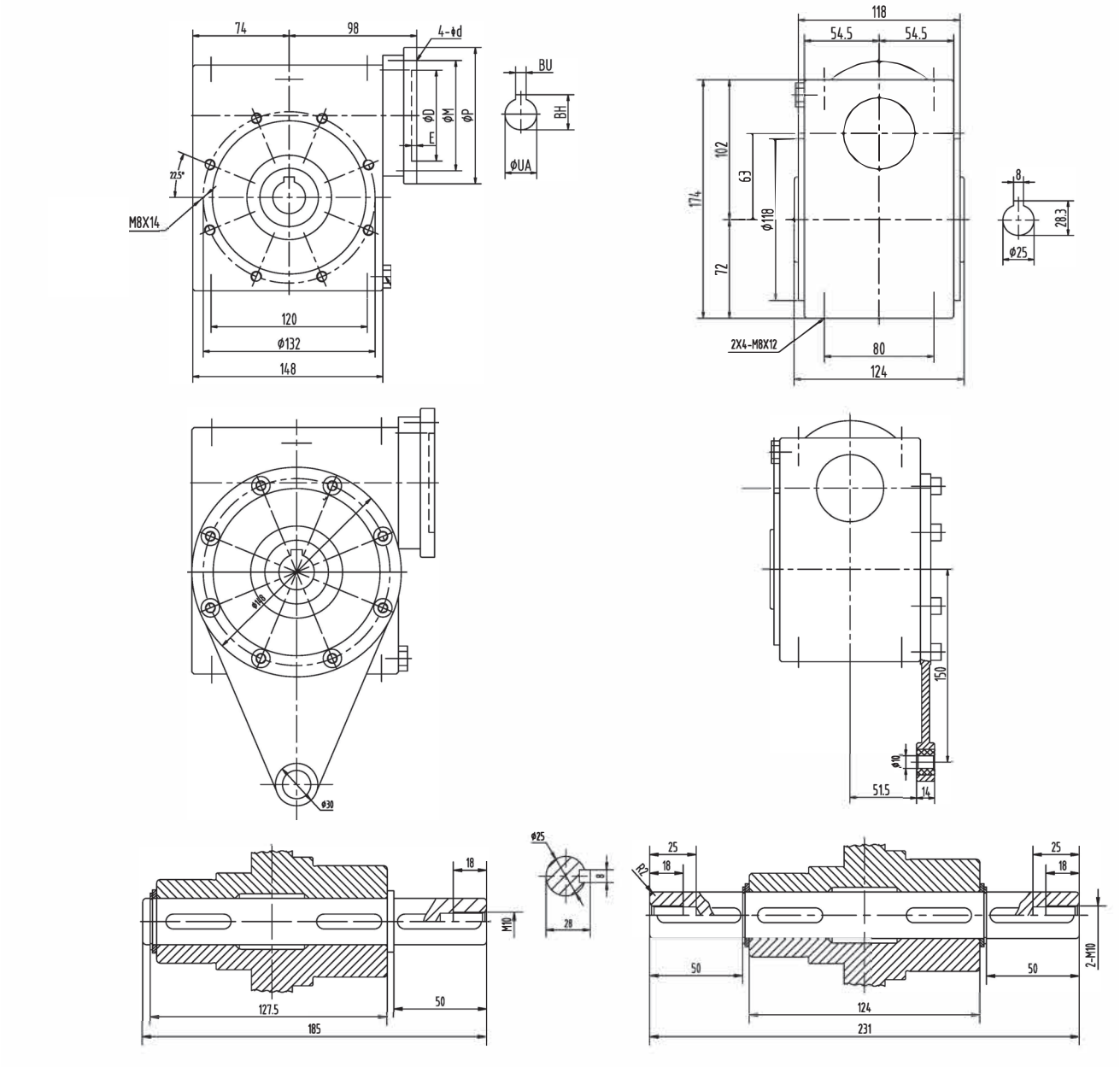

Flens specificaties / Flange specification									
Type	D	M	p	d	BH	BU	E	Q	Ingaande as / Input aperature
90B5	130	165	200	11	21.8	6	6	50	24
90B14	95	115	140	9	27.3	8	6	50	
80B5	130	165	200	11	21.8	6	5	40	19
80B14	80	100	120	6.6	21.8	6	5	40	
71B5	110	130	160	9	16.3	5	5	30	14
71B14	70	85	105	6.6	16.3	5	5	30	

EURN000000_005

2.4 Smering

2.4.1 Algemene informatie

Tenzij anders overeengekomen, worden de reductoren uitgeleverd met een smeermiddelvulling die geschikt is voor de betreffende reductor en de beoogde montagepositie. De montagepositie dient te worden gespecificeerd in de order. Indien de montagepositie naderhand verandert, dient de smeermiddelhoeveelheid te worden aangepast.

2.4.2 Smeermiddel typen

De smeermiddeltabel op de volgende pagina laat de toegestane smeermiddelen voor EURONORM reductoren zien. Onderstaand een verklaring van de in de tabel gebruikte begrippen.

CLP PG	= Polyglycol (W type reductoren, conform USDA-H1)
CLP HC	= Synthetische koolwaterstoffen
CLP HC NSF H1	= Synthetische koolwaterstoffen (NSF H1 gecertificeerd)
E	= Ester olie (water gevaarklasse 1)
	= Synthetisch smeermiddel (= lagersmeermiddel op synthetische basis)
	= Mineraal smeermiddel (= lagersmeermiddel op minerale basis)
4)	Houdt rekening met kritisch startgedrag bij lage temperaturen.
6)	Omgevingstemperatuur
	In de voedingsmiddelenindustrie toegelaten smeermiddel
	Biologisch afbreekbaar smeermiddel (voor toepassing in de landbouw, bosbouw en waterbeheersing)

	6) °C -50 0 +50 +100	DIN (ISO)	ISO,NLGI	Mobil®	Shell	KLÜBER LUBRICATION	ARAL	bp	TEXACO	Castrol Tribol	Castrol Optimol	FUCHS	TOTAL
JRTK	-25 +80	CLP PG	VG 220	Mobil Glygoyle 220	Shell Tivela S 220	Klübersynth GH 6-220	Aral Degol GS 220	BP Enersyn SG-XP 220	Synlube CLP220	Tribol 800/220	Optiflex A 220	Renolin PG 220	Carter SY 220
JRTK	4) -25 Standard +80	CLP HC	VG 220	Mobil SHC 630	Shell Omala HD220	Klübersynth GEM 4-220 N	Aral Degol PAS 220		Pimacle EP220	Tribol 1510/220	Optigear Synthetic X 220	Renolin Unisyn CLP 220	
JRTK	4) -40 +40	CLP HC	VG 150	Mobil SHC 629	Shell Omala HD 150	Klübersynth GEM 4-150 N			Pimacle EP150		Optigear Synthetic X 150	Renolin Unisyn CLP 150	Carter SH 150
JRTK	-40 +20	CLP HC	VG 68	Mobil SHC 626								Renolin Unisyn CLP 68	
JRTK	4) -40 +10	CLP HC	VG 32	Mobil SHC 624		Klüber-Summit HySyn FG-32			Cetus PAO 46		Optileb HY 32	Renolin Unisyn OL32	Dacnis SH 32
JRTS	-10 +40	CLP HC NSF H1	VG 460		Shell Cassida Fluid GL 460	Klüberöl 4UH1-460 N					Optileb GT 460	Geralyn SF 460	
JRTS	-25 +25	CLP HC NSF H1	VG 220		Shell Cassida Fluid GL 220	Klüberöl 4UH1-220 N					Optileb GT 220		
JRTS	4) -40 0	CLP HC NSF H1	VG 68		Shell Cassida Fluid HF 68	Klüberöl 4UH1-68 N					Optileb HY 68		
JRTS	-20 +40	E	VG 460			Klüberbio CA2-460				Tribol BioTop 1418/460		Plantogear 460 S	

2.4.3 Smeermiddel hoeveelheden

De aangegeven smeermiddelhoeveelheden zijn richtvolumes. De exacte volumes zijn afhankelijk van de overbrengingsverhouding en de montagepositie. Controleer het oliepeil altijd met de van toepassing zijnde olieniveauplug.

Onderstaande tabel geeft richtwaarden voor de wijziging in vulvolume voor de montageposities M1tot en met M6.

Smeermiddelhoeveelheid (liters)						
Reductor	M1	M2	M3	M4	M5	M6
JRTK-37	0.50	1.10	1.10	1.40	1.10	1.10
JRTR-37	0.40	1.00	1.00	1.25	1.00	1.00

EURN000000_005

2.4 Lubrification

2.4.1 General information

Unless otherwise agreed, the reducers are supplied with the type and quantity of lubricant suitable for the reducer in its intended mounting position. The mounting position has to be specified in the order. If the mounting position is changed afterwards, the amount of lubricant needs to be changed to suit the new position.

2.4.2 Types of lubricant

The lubricant chart below shows the permitted lubricants for EURONORM reducers.
Below an explanation of the codes and symbols used in the lubrication chart.

CLP PG	= Polyglycol (W type reducers, compliant with USDA-H1)
CLP HC	= Synthetic hydrocarbons
CLP HC NSF H1	= Synthetic hydrocarbons (NSF H1 certified)
E	= Esther oil (water hazard class 1)
	= Synthetic lubricant (bearing lubricant on a synthetic basis)
	= Mineral lubricant (bearing lubricant on a mineral basis)
4)	Be aware of critical starting up behaviour at low temperatures
6)	Ambient temperature
	Permitted lubricant for the food and beverage industry
	Biologically degradable lubricant (for use in agriculture, forestry and water management)

	6) °C -50 0 +50 +100	DIN (ISO)	ISO,NLGI	Mobil®	Shell	KLÜBER LUBRICATION	ARAL	bp	TEXACO	Castrol Tribol	Castrol Optimol	FUCHS	TOTAL
JRTK	-25 … +80	CLP PG	VG 220	Mobil Glygoyle 220	Shell Tivela S 220	Klübersynth GH 6-220	Aral Degol GS 220	BP Enersyn SG-XP 220	Synlube CLP220	Tribol 800/220	Optiflex A 220	Renolin PG 220	Carter SY 220
JRTK	4) -25 … +80 (Standard)	CLP HC	VG 220	Mobil SHC 630	Shell Omala HD220	Klübersynth GEM 4-220 N	Aral Degol PAS 220		Pimacle EP220	Tribol 1510/220	Optigear Synthetic X 220	Renolin Unisyn CLP 220	
JRTK	4) -40 … +40	CLP HC	VG 150	Mobil SHC 629	Shell Omala HD 150	Klübersynth GEM 4-150 N			Pimacle EP150		Optigear Synthetic X 150	Renolin Unisyn CLP 150	Carter SH 150
JRTK	-40 … +20	CLP HC	VG 68	Mobil SHC 626								Renolin Unisyn CLP 68	
JRTK	4) -40 … +10	CLP HC	VG 32	Mobil SHC 624		Klüber-Summit HySyn FG-32			Cetus PAO 46		Optileb HY 32	Renolin Unisyn OL32	Dacnis SH 32
JRTS	-10 … +40	CLP HC NSF H1	VG 460		Shell Cassida Fluid GL 460	Klüberöl 4UH1-460 N					Optileb GT 460	Geralyn SF 460	
JRTS	-25 … +25	CLP HC NSF H1	VG 220		Shell Cassida Fluid GL 220	Klüberöl 4UH1-220 N					Optileb GT 220		
JRTS	4) -40 … 0	CLP HC NSF H1	VG 68		Shell Cassida Fluid HF 68	Klüberöl 4UH1-68 N					Optileb HY 68		
JRTS	-20 … +40	E	VG 460			Klüberbio CA2-460				Tribol BioTop 1418/460		Plantogear 460 S	

2.4.3 Lubricant volumes

The volumes provided are for guidance only. The exact volume is dependent on gear ratio and mounting position. Always check the oil level by means of the level plugs provided.

The table below provides the guide values for the different lubricant volumes based on the mounting position.

Lubricant volume						
Reducer	M1	M2	M3	M4	M5	M6
JRTK-37	0.50	1.10	1.10	1.40	1.10	1.10
JRTR-37	0.40	1.00	1.00	1.25	1.00	1.00

EURN000000_005

2.5 Montageposities en service pluggen / Mounting positions and service plugs

2.5.1 JRTKES

symbool	betekenis
	ventilatieplug
	niveauplug kijkglas
	aftapplug
	invoerpunt motorkabel

Symbol	Meaning
	ventilation plug
	level plug oil mirror
	drain plug
	entry point motor cable

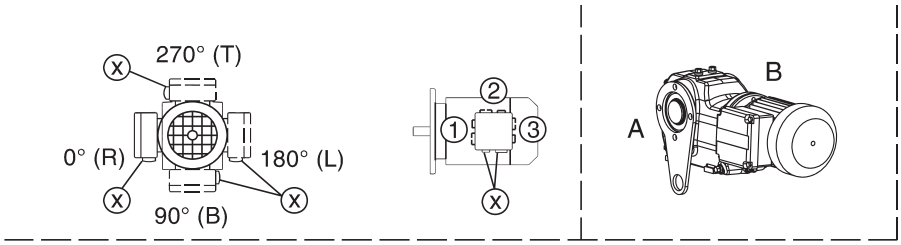

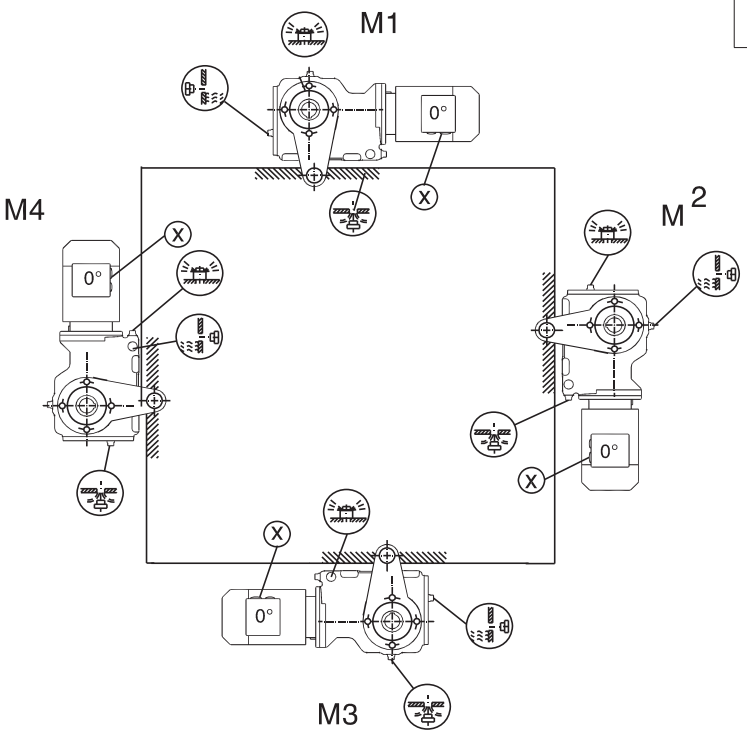

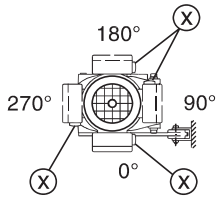

M5

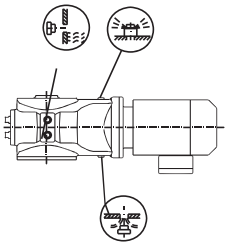

M6

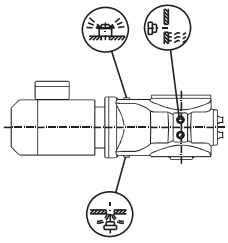

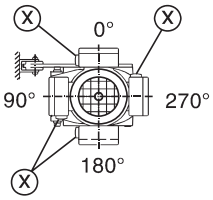

EURN000000_005

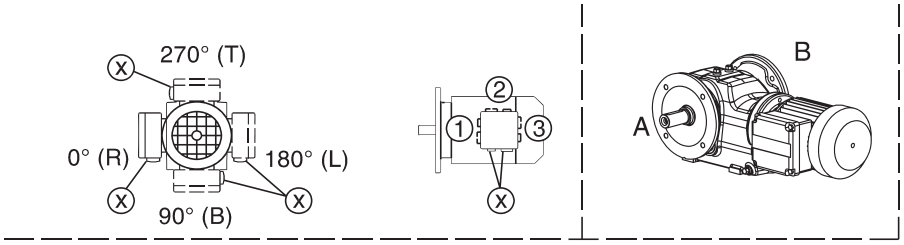

symbool	betekenis
	ventilatieplug
	niveauplug kijkglas
	aftapplug
X	invoerpunt motorkabel

Symbol	Meaning
	ventilation plug
	level plug oil mirror
	drain plug
X	entry point motor cable

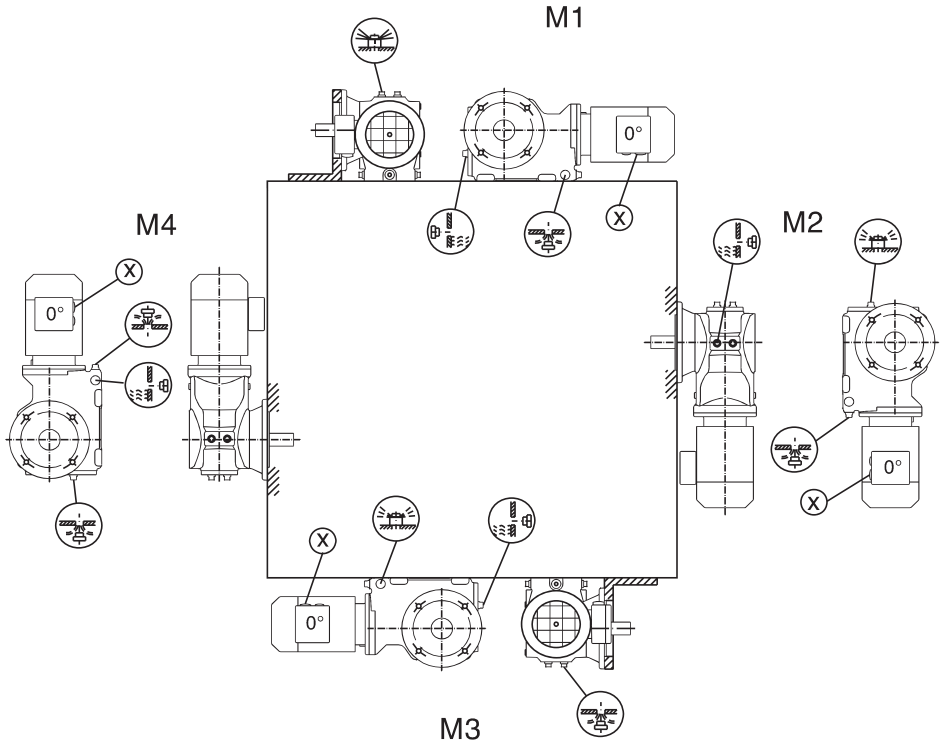

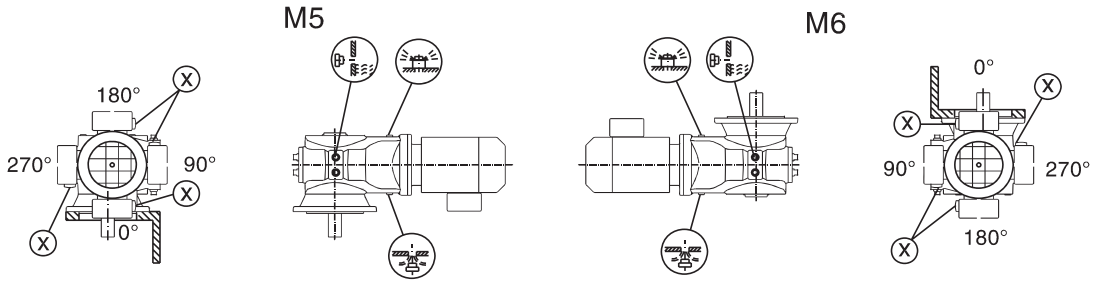

EURN000000_005

2.5.2 JRTRES

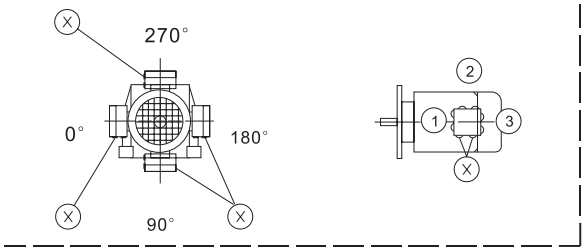

symbool	betekenis
	ventilatieplug
	niveauplug kijkglas
	aftapplug
X	invoerpunt motorkabel

Symbol	Meaning
	ventilation plug
	level plug oil mirror
	drain plug
X	entry point motor cable

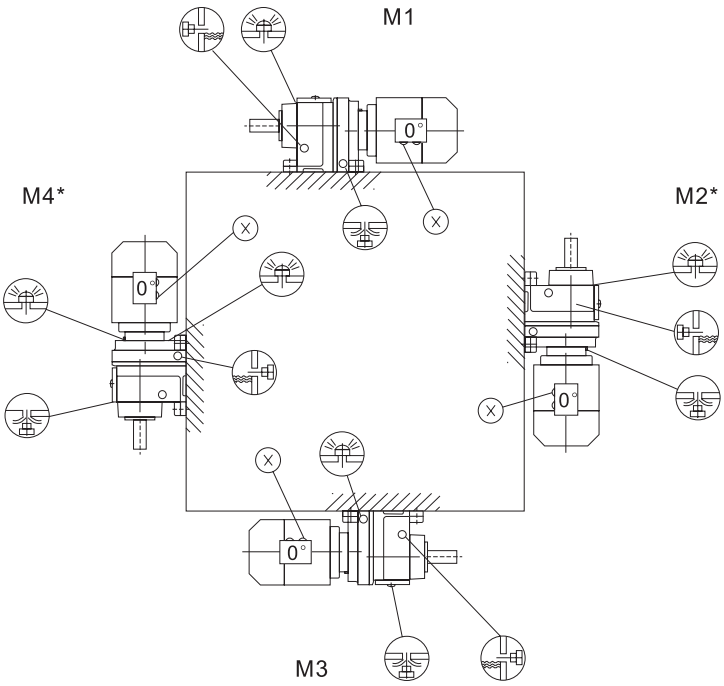

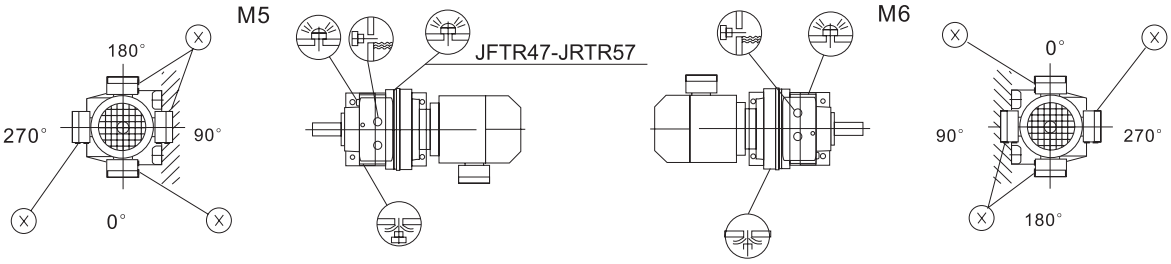

EURN000000_005

2.5.3 JRTRESF

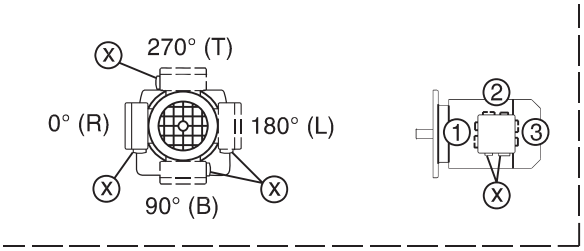

symbool	betekenis
	ventilatieplug
	niveauplug kijkglas
	aftapplug
X	invoerpunt motorkabel

Symbol	Meaning
	ventilation plug
	level plug oil mirror
	drain plug
X	entry point motor cable

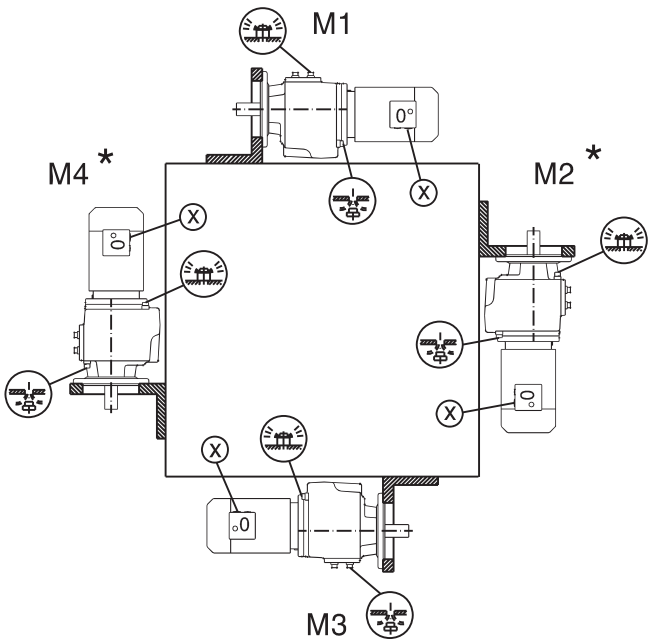

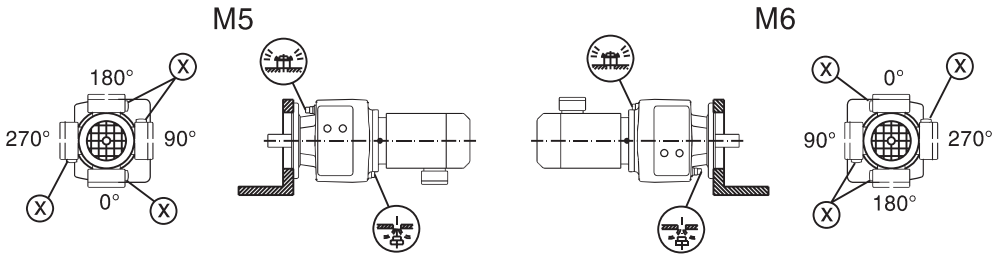

JRTRESF M1, M2 , M3 , M4 , M5 , M6

EURN000000_005

3. EURONORM RVS motoren

De Euronorm RVS motoren zijn geschikt voor plekken waarbij een hoge waterdichtheid en goede weerstand tegen corrosie op de eerste plaats komen. De stofvrije en waterbestendige IP 66 motoren zijn standaard uitgevoerd in RVS 304 en voorzien van PTC's om vroegtijdig een te hoge temperatuur in de wikkelingen te detecteren. De stofvrije en vochtdichte IP69K motoren zijn uitgevoerd in RVS 316 voor toepassingen met de hoogste eisen. Bij deze versie is de klemmenkast achter op de motor aangebracht.

Waterdicht en hygiënisch

Het motorhuis is TIG gelast voor een zeer gladde buitenzijde. Dankzij de diepe pasranden en dubbele o-ringen ontstaat een stabiele en 100% waterdichte verbinding met de voor- en achterschilden. De hoogwaardige afdichtingen en wartels zorgen voor een zeer gladde, hygiënische en waterdichte motor. Zelfs het typeplaatje moest wijken. De motorinformatie en het aansluitschema is onuitwisbaar in het motorhuis gelaserd.

Uitvoeringen

(TENV) zonder koelwaaier
(TEFC) met koelwaaier
(TEWC) watergekoeld

Uitgaand vermogen

0,18 – 7,5kW

Toerental

1000 / 1500 / 3000 rpm

Voedingsspanning

230V AC
400V AC

Beschermingsklasse

IP 66
IP 69K

Materiaal behuizing

RVS 304
RVS 316

Temperatuur monitoring

Standaard voorzien van PTC´s

EURN000000_005

3. EURONORM CRES motors

The EURONORM CRES motors are first choice for installations were a high degree of water tightness and a good resistance against corrosion are prime requirements. The dust free and water-resistant IP 66 motors are executed in 304 quality corrosion resistant steel as standard, and fitted with PTC sensors for an early detection of high temperatures in the windings. The dust free and moisture proof IP69K motors are executed in 316 quality corrosion resistant steel for even more demanding requirements. On this version, the connection box is fitted to the rear of the motor.

Watertight and hygienic

The motor casing is TIG welded to achieve the ultimate exterior smoothness. Thanks to the deep mounting surface joints and double seals, a very stable and 100% watertight connection between the front and rear shields and the motor frame. The high grade seals (in food quality if required) and glands warrant a very smooth, hygienic and water tight motor. The desire to achieve a smooth motor surface also saw the motor type plate being replaced by a clear and indelible lasered on the motor frame.

Executions

(TENV) without cooling fan
(TEFC) with cooling fan
(TEWC) water cooled

Output

0,18 – 7,5kW

Motor speed

1000 / 1500 / 3000 rpm

Supply voltage

230V AC
400V AC

Protection class

IP 66
IP 69K

Motor frame material

RVS 304
RVS 316

Temperature monitoring

PTC sensors fitted as standard

EURN000000_005

Hub van Doorneweg 8 • 2171 KZ Sassenheim – NL • T +31(0)252 228850 • F +31(0)252 228235 • E sales@euronorm.nl • I euronormdrives.com

3.1 HYW Serie Technische gegevens IP69K / HYW Series Technical data IP69K

4 polig - 1500 rpm														
Type	P_n	n_n	I_n	η			cos φ		Mn	M_s/M_n	M_{max}/M_n	I_s/I_n	J_D	Gewicht / Weight
	kW	rpm	A	100%	75%	50%			Nm			Y	kg m²	kg
63A	0,12	1430	0,42	72,0			0,57		0,8	3,5	4,5	7,5	0,0011	10
63B	0,18	1430	0,56	75,0			0,62		1,2	3,5	4,5	7,5	0,0015	12
71A	0,25	1430	0,7	77,0			0,64		1,7	4,0	5,0	8,0	0,0018	13
71B	0,37	1435	1,1	79,0			0,64		2,5	4,0	5,0	8,0	0,0023	16
80A	0,56	1440	1,4	81,0			0,70		3,6	4,5	5,4	9,0	0,0041	22
80B	0,75	1440	2,0	82,5	80,9	77,8	0,70	IE3	5,0	4,8	5,6	9,0	0,0053	25
90S	1,1	1450	2,8	84,1	81,8	80,7	0,70	IE3	7,2	4,8	6,0	9,0	0,0075	32
90L	1,5	1450	3,6	85,3	83,7	83,2	0,71	IE3	9,9	4,8	6,0	9,5	0,010	40

3.1.1 Afmetingen EURONORM RVS TENV motoren / Dimensions EURONORM CRES TENV motors

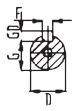

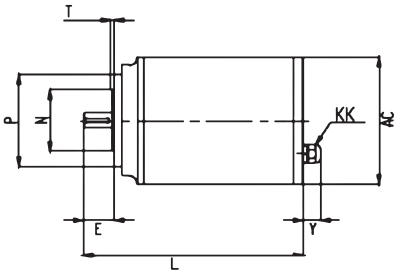

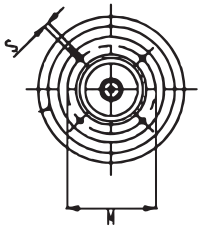

B14 flens / B14 flange

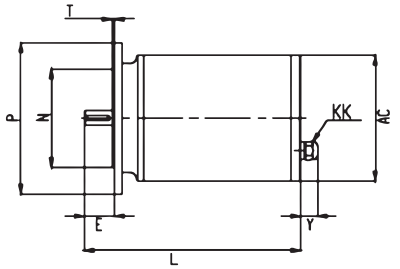

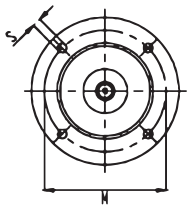

B5 flens / B5 flange

HYW serie / HYW series															
Type	DE	NDE	KK	M	N	P	R	n x S	T	M	N	P	R	n x S	T
63	6202 2RZ	62022RZ	M16X1.5	115	95 j6	140	≤0	4x10	3	75	60 j6	90	≤0	4xMS	2,5
71	6202 2RZ	62022RZ	M20X1.5	130	110 j6	160	≤0	4x10	3,5	85	70 j6	105	≤0	4xM6	2,5
80	6205 2RZ	6203 2RZ	M20X1.5	165	130 j6	200	≤0	4x12	3,5	100	80 j6	120	≤0	4xM6	3
90S/L	6205 2RZ	62032RZ	M25X1.5	165	130 j6	200	≤0	4x12	3,5	115	95 j6	140	≤0	4xM8	3

HYW serie / HYW series								
	As / Shaft					Algemeen / General		
Type	D	E	F	G	GD	AC	Y	L
63A	11 j6 M4	23	4	8,5	4	131	22	228
63B								243
71A	14 j6 M5	30	5	11	5	131	25	265
71B								285
80A	1S i6 M6	40	6	15,5	6	166	25	266
80B								288
906	24 j6 M8	50	8	20	7	166	30	333
90L								373

EURN000000_005

3.2 Technische gegevens EURONORM RVS TEFC motoren (met koelwaaier) / Technical data EURONORM RVS TEFC motors (with cooling fan)

2 polig - 3000 rpm												
Type	P_n	n_n	I_n	I_a/I_n	η			cos φ	M_n	M_a/M_n	M_k/M_n	Gewicht / Weight
	kW	rpm	A	Y	100%	75%	50%		Nm			kg
80B	0,75	2915	1,53	9,36	80,7	78	73,6	0,88	2,47	4,84	7,03	21,9
80C	1,1	2910	2,14	13,2	82,7	81	78	0,9	3,6	7,7	10,36	18,9
80D	1,5	2900	2,82	19,3	85,6	85	84,4	0,86	4,95	11,97	15,49	23,4
90B	1,5	2889	3,2	22	84,7	83,1	80,5	0,8	4,97	22,3	22,5	23,4
90D	2,2	2850	4,35	28,8	85,9	85,5	84,1	0,85	7,38	30,1	32,2	30,9
100B	3	2927	5,5	40	84,4	83,5	79,9	0,93	9,8	21,4	34,1	42,7
112A	4	2928	7,6	53,6	88,7	87	85	0,87	13,28	35,5	49,9	65
132A1	5,5	2930	9,18	64,26	89,2	88	86	0,89	17,9	28,46	63,5	74,5
132A2	7,5	2905	13,15	92	90,1	88,5	86,7	0,9	24,78	49,56	106,5	87

4 polig - 1500 rpm												
Type	P_n	n_n	I_n	I_a/I_n	η			cos φ	M_n	M_a/M_n	M_k/M_n	Gewicht / Weight
	kW	rpm	A	Y	100%	75%	50%		Nm			kg
71A	0,37	1440	0,95	5,26	79,5	77,9	74,5	0,71	2,46	6,34	7,97	11,2
80A	0,75	1463	1,7	9,8	83	82,1	78	0,71	4,92	13,62	15,84	21,4
90A	1,1	1442	2,41	16,1	84,2	83,9	82,5	0,78	7,29	20	24,85	23,4
90B	1,5	1452	3,3	24,7	85,3	83,5	80,1	0,78	9,9	32,67	39	30,9
100A	2,2	1453	4,39	27,52	87,4	86,7	84,4	0,83	14,5	34,65	45	42,7
100D	3	1456	6,3	44,1	87,7	87,4	85,5	0,79	19,69	51,58	66,8	44,7
112A	4	1455	7,6	52,4	88,6	88,1	87	0,84	26,11	52,2	81,9	65
132B	5,5	1472	11,63	81,41	89,6	85,2	82	0,8	36	72	118,8	74,5
132M	7,5	1465	14,8	100,6	90,4	88,9	86	0,83	48,9	106,1	155,9	87

6 polig - 1000 rpm												
Type	P_n	n_n	I_n	I_a/I_n	η			cos φ	M_n	M_a/M_n	M_k/M_n	Gewicht / Weight
	kW	rpm	A	Y	100%	75%	50%		Nm			kg
90C	0,75	965	2,06	12,75	79	76,6	75	0,7	7,56	28,35	33,41	25,7
90E	1,1	957	2,81	13,63	84	83,6	81,5	0,67	11,02	27,1	31,1	23,4
100C	1,5	943	3,61	14,8	82,3	83	81,7	0,7	15,27	23,9	35,12	42,7

3.2.1 Afmetingen EURONORM RVS TEFC IP 66 motoren / Dimensions EURONORM CRES TEFC IP 66 motors

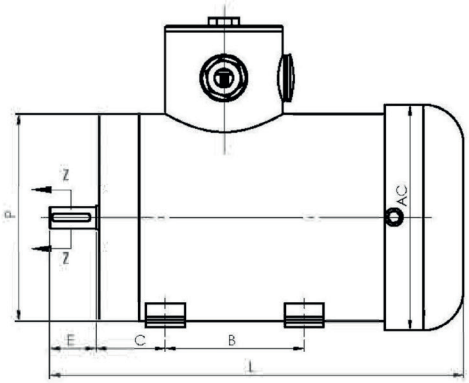

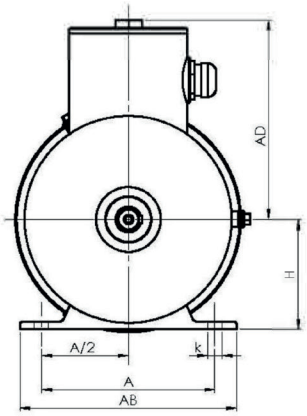

EURN000000_005

B3 voet / foot — TEFC

	Bouwgrootte / Frame size				Voetmaat / Foot size						Asmaat / Shaft size				
Type	L	AC	H	AD	A	AB	A/2	C	B	K	D	E	F	G	Draadgat in as / Threaded hole in shaft
71A	277	146	71	129	112	140	56	45	90	7	14	30	5	11	M5
80A	332	156	80	135	125	150	62,5	50	100	10	19	40	6	15,5	M6
80B	338	156	80	135	125	150	62,5	50	100	10	19	40	6	15,5	M6
80C	362	156	80	135	125	150	62,5	50	100	10	19	40	6	15,5	M6
80D	377	156	80	135	125	150	62,5	50	100	10	19	40	6	15,5	M6
90A	351	176	90	147	140	164	70	56	125	9	24	50	8	20	M8
90B	367	176	90	147	140	164	70	56	125	9	24	50	8	20	M8
90C	387	176	90	147	140	164	70	56	125	9	24	50	8	20	M8
90D	417	176	90	147	140	164	70	56	125	9	24	50	8	20	M8
100A	464	203	100	169	160	190	80	63	140	12	28	60	8	24	M10
100B	479	203	100	169	160	190	80	63	140	12	28	60	8	24	M10
100C	489	203	100	169	160	190	80	63	140	12	28	60	8	24	M10
100D	509	203	100	169	160	190	80	63	140	12	28	60	8	24	M10
112A	488	218	112	174	190	220	95	70	140	12	28	60	8	24	M10
132A	506	256	132	192	108	246	216	89	140	12	28	80	10	24	M12
132B	511	256	132	192	108	246	216	89	140	12	38	80	10	33	M12
132C	536	256	132	192	108	246	216	89	140	12	38	80	10	33	M12
132M	536	256	132	192	108	246	216	89	178	12	38	80	10	33	M12

B14 flens / flange — TEFC

Bouwgrootte / Frame size	Afmetingen flens / Flange dimension				
	Ø P	Ø N	M	T	S
71	105	70	85	2,5	M6
80	120	80	100	3	M6
90	140	95	115	3	M8
100	160	110	130	3,5	M8
112	160	110	130	3,5	M8
132	200	130	165	3,5	M10

B14 flens / B14 flange

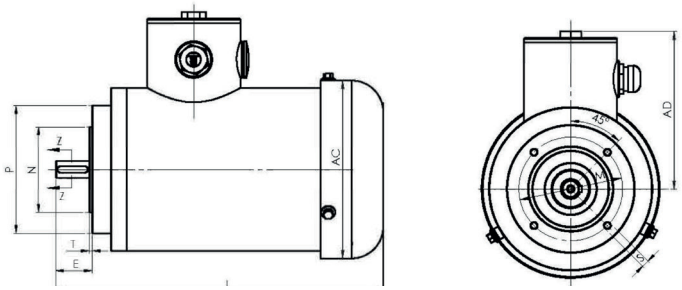

B14 flens / flange — TEFC

Bouwgrootte / Frame size	Afmetingen flens / Flange dimension				
	Ø P	Ø N	M	T	S
71	160	110	130	3,5	10
80	200	130	165	3,5	12
90	200	130	165	3,5	12
100	250	180	215	4	15
112	250	180	215	4	15
132	300	230	265	4	15

B5 flens / B5 flange

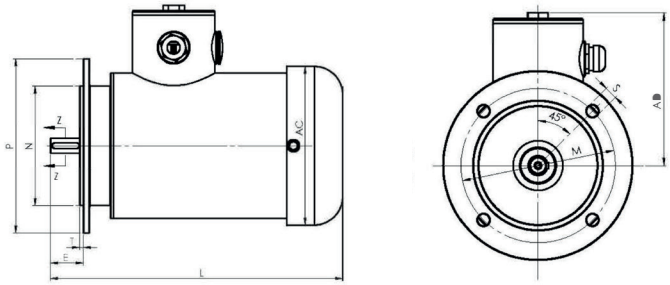

EURN000000_005

3.3 Technische gegevens EURONORM RVS TENV motoren (zonder koelwaaier) / Technical data EURONORM RVS TENV motors (without cooling fan)

2 polig - 3000 rpm												TENV
Type	P_n	n_n	I_n	I_a/I_n	η			cos φ	M_n	M_a/M_n	M_k/M_n	Gewicht / Weight
	kW	rpm	A	Y	100%	75%	50%		Nm			kg
63A	0,18	2824	0,48	2,4	68,1	65	59,5	0,81	0,61	1,49	1,76	8,7
63B	0,25	2866	0,59	4,1	77,2	72,8	68	0,8	0,84	3,2	3,6	8,7
71A	0,37	2871	0,8	4,76	78,6	75,8	69,5	0,85	1,24	3,64	4,05	12,2
71C	0,55	2897	1,17	7,9	80,9	79	76	0,88	1,82	7,82	8,42	13,7
80B	0,75	2915	1,53	10,71	80,7	78,8	73	0,88	2,47	6,22	8,42	16,4

4 polig - 1500 rpm												TENV
Type	P_n	n_n	I_n	I_a/I_n	η			cos φ	M_n	M_a/M_n	M_k/M_n	Gewicht / Weight
	kW	rpm	A	Y	100%	75%	50%		Nm			kg
63B	0,18	1411	0,58	2,49	67	64	59	0,68	1,23	3,44	3,84	8,7
71A	0,25	1447	0,63	3,23	77,8	65,5	70	0 ,73	1,64	3,52	4,85	12,2
71B	0,37	1440	0,95	5,26	79,5	77,9	74,5	0,71	2,46	6,34	7,97	12,2
80A	0,55	1445	1,33	8,1	83,9	82,6	77	0,72	3,63	10,52	12,81	18,9
80B	0,75	1463	1,8	12,6	85,1	84,2	78	0,71	4,92	17,3	20,2	21,4

6 polig - 1000 rpm												TENV
Type	P_n	n_n	I_n	I_a/I_n	η			cos φ	M_n	M_a/M_n	M_k/M_n	Gewicht / Weight
	kW	rpm	A	Y	100%	75%	50%		Nm			kg
71B	71	0,18	945	0,52	1,98	75,8	73,5	70,9	0,66	1,82	3,31	11,7
71C	71	0,25	947	0,76	3	76,1	73,9	68,6	0,65	2,52	4,36	12,8
80A	80	0,37	940	1	4,2	78,5	76,9	78,5	0,69	3,75	8,73	18,9
80B	80	0,55	954	1,37	5,61	82,5	81,9	78,5	0,71	5,55	10,93	21,2
90A	90S	0,75	968	2	10	85,1	83,5	80,5	0,7	7,43	20,8	22,9

3.3.1 Afmetingen EURONORM RVS TENV motoren / Dimensions EURONORM CRES TENV motors

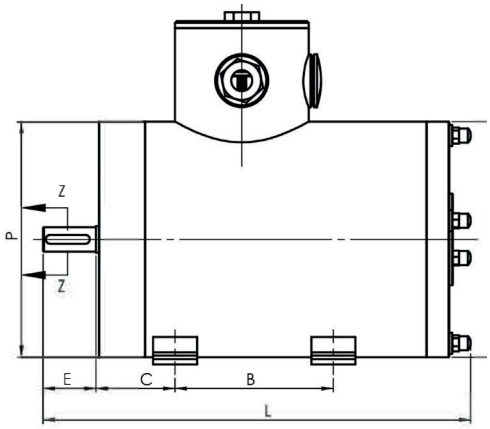

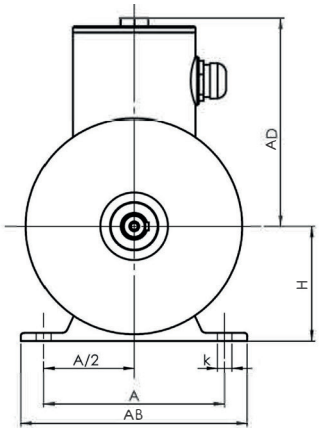

EURN000000_005

B3 voet — TENV

	Bouwgrootte / Frame size			Voetmaat / Foot size						Asmaat / Shaft size				
Type	L	AC	AD	A	AB	A/2	C	B	K	D	E	F	G	Draadgat in as / Threaded hole in shaft
63A	212	114	117	100	125	50	40	80	7	11	23	4	8,5	M4
63B	237	114	117	100	125	50	40	80	7	11	23	4	8,5	M4
71A	243	134	129	112	140	56	45	90	7	14	30	5	11	M5
71B	253	134	129	112	140	56	45	90	7	14	30	5	11	M5
71C	273	134	129	112	140	56	45	90	7	14	30	5	11	M5
80A	308	144	135	125	150	62,5	50	100	10	19	40	6	15,5	M6
80B	338	144	135	125	150	62,5	50	100	10	19	40	6	15,5	M6
80C	348	144	135	125	150	62,5	50	100	10	19	40	6	15,5	M6
90A	394	164	147	140	164	70	56	100	9	24	50	8	20	M8

B14 flens / flange — TENV

Bouwgrootte / Frame size	Afmetingen flens / Flange dimension					
	Ø P	Ø N	M		T	S
63	90	60	75	2,5	M5	M4
71	105	70	85	2,5	M6	M5
80	120	80	100	3	M6	M6
90	140	95	115	3	M8	M8

B14 flens / B14 flange

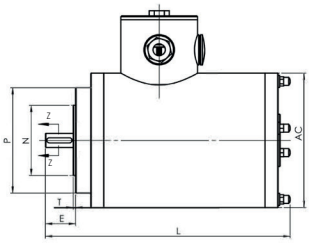

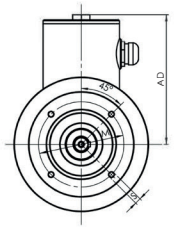

B5 flens / flange — TENV

Bouwgrootte / Frame size	Afmetingen flens / Flange dimension					
	Ø P	Ø N	M		T	S
63	140	95	115	2,5	M10	M10
71	160	110	130	2,5	M10	M12
80	200	130	165	3,5	M12	M12
90	200	130	165	3,5	M12	M12

B5 flens / B5 flange

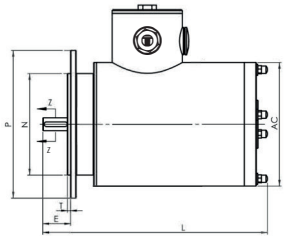

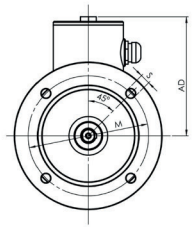

EURN000000_005

3.4 Afmetingen NEMA RVS motoren / Dimensions NEMA CRES motors

3.4.1 56C - 145TC TENV

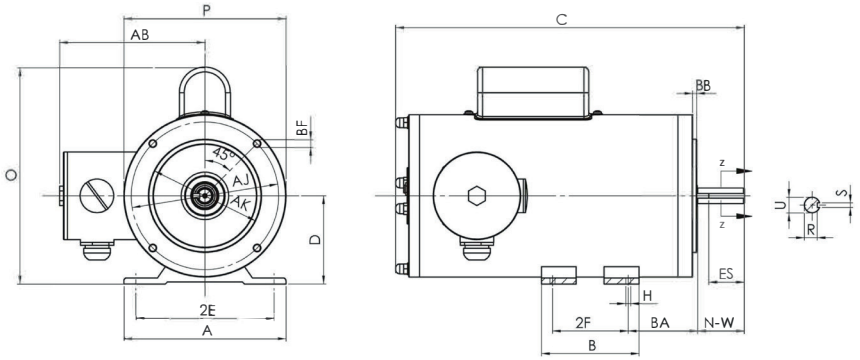

2 polig																					TENV
Bouwrootte Frame size	kW	A	BB	BA	N-W	U	R	S	ES	E	2F	B	H	BF	AJ	AK	P	AB	D	0	C
56C	0.37	6.5	0.16	2.75	1.88	0.625	0.517	0.188	1.41	2.44	3	3.87	0.34	3/8-16	5.875	4.5	6.46	5.79	3.504	6.73	257
56C	0.55	6.5	0.16	2.75	1.88	0.625	0.517	0.188	1.41	2.44	3	3.87	0.34	3/8-16	5.875	4.5	6.46	5.79	3.504	6.73	257
56C	0.75	6.5	0.16	2.75	1.88	0.625	0.517	0.188	1.41	2.44	3	3.87	0.34	3/8-16	5.875	4.5	6.46	5.79	3.504	6.73	257
56C	1.1	6.5	0.16	2.75	1.88	0.625	0.517	0.188	1.41	2.44	3	3.87	0.34	3/8-16	5.875	4.5	6.46	5.79	3.504	6.73	307
56C	1.5	6.5	0.16	2.75	1.88	0.625	0.517	0.188	1.41	2.44	3	3.87	0.34	3/8-16	5.875	4.5	6.46	5.79	3.504	6.73	331
145TC	1.1	6.5	0.16	2.75	2.25	0.771	0.771	0.188	1.41	2.75	5	5.87	0.34	3/8-16	5.875	4.5	6.46	5.79	3.504	6.73	309
145TC	1.5	6.5	0.16	2.75	2.25	0.771	0.771	0.188	1.41	2.75	5	5.87	0.34	3/8-16	5.875	4.5	6.46	5.79	3.504	6.73	333

4 polig																					TENV
Bouwrootte Frame size	kW	A	BB	BA	N-W	U	R	S	ES	E	2F	B	H	BF	AJ	AK	P	AB	D	0	C
56C	0.25	6.5	0.16	2.75	1.88	0.625	0.517	0.188	1.41	2.44	3	3.87	0.34	3-8-16	5.875	4.5	6.46	5.79	3.504	6.73	257
56C	0.37	6.5	0.16	2.75	1.88	0.625	0.517	0.188	1.41	2.44	3	3.87	0.34	3-8-16	5.875	4.5	6.46	5.79	3.504	6.73	257
56C	0.55	6.5	0.16	2.75	1.88	0.625	0.517	0.188	1.41	2.44	3	3.87	0.34	3-8-16	5.875	4.5	6.46	5.79	3.504	6.73	257
56C	0.75	6.5	0.16	2.75	1.88	0.625	0.517	0.188	1.41	2.44	3	3.87	0.34	3-8-16	5.875	4.5	6.46	5.79	3.504	6.73	287
56C	1.1	6.5	0.16	2.75	1.88	0.625	0.517	0.188	1.41	2.44	3	3.87	0.34	3-8-16	5.875	4.5	6.46	5.79	3.504	6.73	331
56C	1.5	6.5	0.16	2.75	1.88	0.625	0.517	0.188	1.41	2.44	3	3.87	0.34	3-8-16	5.875	4.5	6.46	5.79	3.504	6.73	377
143TC	0.75	6.5	0.16	2.75	2.25	0.771	0.771	0.188	1.41	2.75	4	4.87	0.34	3-8-16	5.875	4.5	6.46	5.79	3.504	6.73	289
145TC	1.1	6.5	0.16	2.75	2.25	0.771	0.771	0.188	1.41	2.75	5	5.87	0.34	3-8-16	5.875	4.5	6.46	5.79	3.504	6.73	333
145TC	1.5	6.5	0.16	2.75	2.25	0.771	0.771	0.188	1.41	2.75	5	5.87	0.34	3-8-16	5.875	4.5	6.46	5.79	3.504	6.73	397

3.4.2 56C - 215TC TEFC

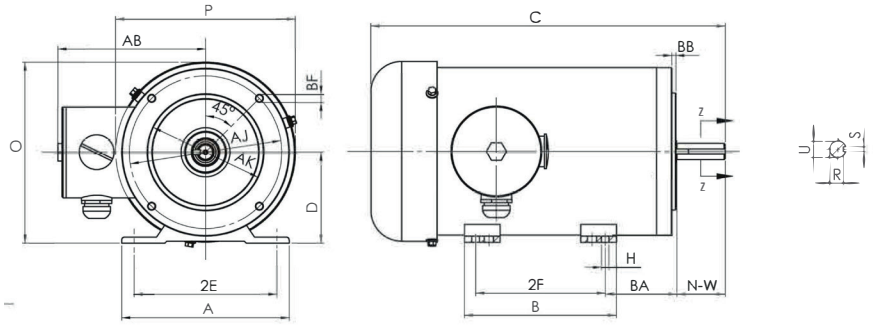

2 polig																					TEFC
Bouwrootte Frame size	kW	A	BB	BA	N-W	U	R	S	ES	E	2F	B	H	BF	AJ	AK	P	AB	D	0	C
56C	0.75	6.5	0.16	2.75	1.88	0.625	0.517	0.188	1.41	2.44	3	3.87	0.34	3-8-16	5.875	4.5	6.93	5.79	3.504	6.97	297
56C	1.1	6.5	0.16	2.75	1.88	0.625	0.517	0.188	1.41	2.44	3	3.87	0.34	3-8-16	5.875	4.5	6.93	5.79	3.504	6.97	327
56C	1.5	6.5	0.16	2.75	1.88	0.625	0.517	0.188	1.41	2.44	3	3.87	0.34	3-8-16	5.875	4.5	6.93	5.79	3.504	6.97	327
143TC	0.75	6.5	0.16	2.75	2.25	0.771	0.771	0.188	1.41	2.75	4	4.87	0.34	3-8-16	5.875	4.5	6.93	5.79	3.504	6.97	299
145TC	1.1	6.5	0.16	2.75	2.25	0.771	0.771	0.188	1.41	2.75	5	5.87	0.34	3-8-16	5.875	4.5	6.93	5.79	3.504	6.97	329
145TC	1.5	6.5	0.16	2.75	2.25	0.771	0.771	0.188	1.41	2.75	5	5.87	0.34	3-8-16	5.875	4.5	6.93	5.79	3.504	6.97	329
145TC	2.2	6.5	0.16	2.75	2.25	0.771	0.771	0.188	1.41	2.75	5	5.87	0.34	3-8-16	5.875	4.5	6.93	5.79	3.504	6.97	373
184TC	4	8.7	0.25	3.5	2.75	0.986	0.986	0.25	1.78	3.75	5.5	6.47	0.41	1-2-13	7.25	8.5	8.58	6.85	4.5	8.79	436

EURN000000_005

4 polig																					TEFC
Bouwrootte Frame size	kW	A	BB	BA	N-W	U	R	S	ES	E	2F	B	H	BF	AJ	AK	P	AB	D	0	C
56C	0.25	6.5	0.16	2.75	1.88	0.625	0.517	0.188	1.41	2.44	3	3.87	0.34	3/8-16	5.875	4.5	6.93	5.79	3.504	6.97	297
56C	0.37	6.5	0.16	2.75	1.88	0.625	0.517	0.188	1.41	2.44	3	3.87	0.34	3/8-16	5.875	4.5	6.93	5.79	3.504	6.97	297
56C	0.55	6.5	0.16	2.75	1.88	0.625	0.517	0.188	1.41	2.44	3	3.87	0.34	3/8-16	5.875	4.5	6.93	5.79	3.504	6.97	297
56C	0.75	6.5	0.16	2.75	1.88	0.625	0.517	0.188	1.41	2.44	3	3.87	0.34	3/8-16	5.875	4.5	6.93	5.79	3.504	6.97	327
56C	1.1	6.5	0.16	2.75	1.88	0.625	0.517	0.188	1.41	2.44	3	3.87	0.34	3/8-16	5.875	4.5	6.93	5.79	3.504	6.97	347
56C	1.5	6.5	0.16	2.75	1.88	0.625	0.517	0.188	1.41	2.44	3	3.87	0.34	3/8-16	5.875	4.5	6.93	5.79	3.504	6.97	347
143TC	0.75	6.5	0.16	2.75	2.25	0.771	0.771	0.188	1.41	2.75	4	4.87	0.34	3/8-16	5.875	4.5	6.93	5.79	3.504	6.97	329
145TC	1.1	6.5	0.16	2.75	2.25	0.771	0.771	0.188	1.41	2.75	5	5.87	0.34	3/8-16	5.875	4.5	6.93	5.79	3.504	6.97	349
145TC	1.5	6.5	0.16	2.75	2.25	0.771	0.771	0.188	1.41	2.75	5	5.87	0.34	3/8-16	5.875	4.5	6.93	5.79	3.504	6.97	349
145TC	2.2	6.5	0.16	2.75	2.25	0.771	0.771	0.188	1.41	2.75	5	5.87	0.34	3/8-16	5.875	4.5	6.93	5.79	3.504	6.97	414
182TC	2.2	8.7	0.25	3.5	2.75	0.986	0.986	0.25	1.78	3.75	4.5	6.47	0.41	1/2-13	7.25	8.5	8.58	6.85	4.5	8.79	436
184TC	4	8.7	0.25	3.5	2.75	0.986	0.986	0.25	1.78	3.75	5.5	6.47	0.41	1/2-13	7.25	8.5	8.58	6.85	4.5	8.79	472
213TC	5.5	9.7	0.25	4.25	3.38	1.201	1.201	0.312	2.41	4.25	5.5	7.47	0.41	1/2-13	7.25	8.5	L0.08	7.56	5.25	10.29	522
215TC	7.5	9.7	0.25	4.25	3.38	1.201	1.201	0.312	2.41	4.25	7	8.97	0.41	1/2-13	7.25	8.5	L0.08	7.56	5.25	10.29	557

3.4.3 56C - 145TC
enkele condensator TENV / single coil TENV

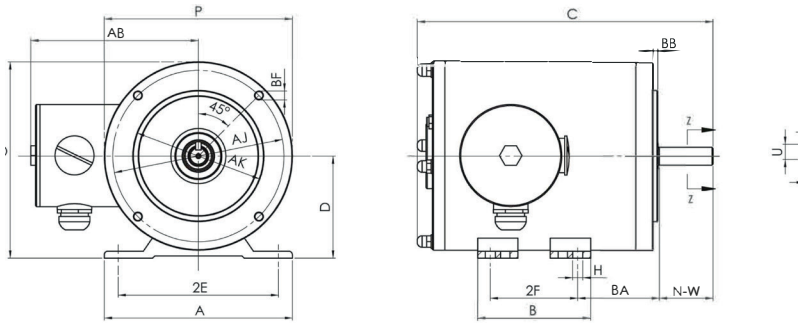

2 polig																					TENV
Bouwrootte Frame size	kW	A	BB	BA	N-W	U	R	S	ES	E	2F	B	H	BF	AJ	AK	P	AB	D	0	C
56C	0.37	6.5	0,16	2,75	1.88	0,625	0,517	0.188	1.41	2.44	3	3.87	0.34	3/8-16	5.875	4.5	6,93	5,79	3,504	8.51	
56C	0.55	6.5	0,16	2,75	1.88	0,625	0,517	0.188	1.41	2.44	3	3.87	0.34	3/8-16	5.875	4.5	6,93	5,79	3,504	8.51	
56C	0.75	6.5	0,16	2,75	1.88	0,625	0,517	0.188	1.41	2.44	3	3.87	0.34	3/8-16	5.875	4.5	6,93	5,79	3,504	8.51	
143TC	0.75	6.5	0.16	2,75	2,25	0,771	0,771	0.188	1.41	2.75	4	4.87	0.34	3/8-16	5.875	4.5	6,93	5,79	3,504	8.51	
145TC	1.1	6.5	0,16	2,75	2,25	0,771	0,771	0.188	1.41	2.75	5	5.87	0.34	3/8-16	5.875	4.5	6,93	5,79	3,504	8.51	

4 polig																					TENV
Bouwrootte Frame size	kW	A	BB	BA	N-W	U	R	S	ES	E	2F	B	H	BF	AJ	AK	P	AB	D	0	C
56C	0.37	6.5	0,16	2,75	1.88	0,625	0,517	0.188	1.41	2.44	3	3.87	0.34	3/8-16	5.875	4.5	6,93	5,79	3,504	8.51	
56C	0.55	6.5	0,16	2,75	1.88	0,625	0,517	0.188	1.41	2.44	3	3.87	0.34	3/8-16	5.875	4.5	6,93	5,79	3,504	8.51	
56C	0.75	6.5	0,16	2,75	1.88	0,625	0,517	0.188	1.41	2.44	3	3.87	0.34	3/8-16	5.875	4.5	6,93	5,79	3,504	8.51	
143TC	0.75	6.5	0.16	2,75	2,25	0,771	0,771	0.188	1.41	2.75	4	4.87	0.34	3/8-16	5.875	4.5	6,93	5,79	3,504	8.51	
145TC	1.1	6.5	0,16	2,75	2,25	0,771	0,771	0.188	1.41	2.75	5	5.87	0.34	3/8-16	5.875	4.5	6,93	5,79	3,504	8.51	

EURN000000_005

3.4.4 56C - 143TC
enkele condensator TEFC / single coil TEFC

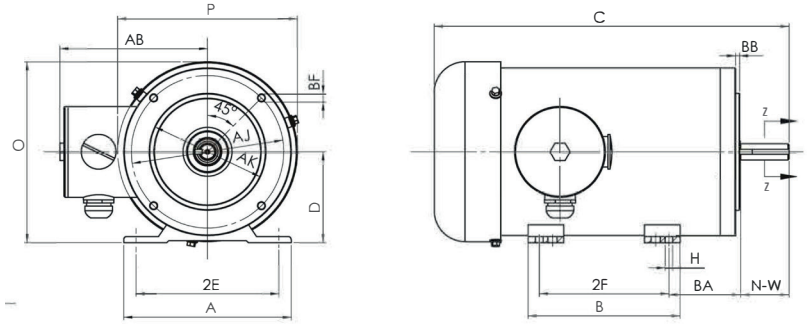

2 polig																					TEFC
Bouwrootte Frame size	kW	A	BB	BA	N-W	U	R	S	ES	E	2F	B	H	BF	AJ	AK	P	AB	D	0	C
56C	0.37	6.5	0,16	2,75	1.88	0,625	0,517	0.188	1.41	2.44	3	3.87	0.34	3/8-16	5.875	4.5	6,93	5,79	3,504	8.51	297
56C	0.55	6.5	0,16	2,75	1.88	0,625	0,517	0.188	1.41	2.44	3	3.87	0.34	3/8-16	5.875	4.5	6,93	5,79	3,504	8.51	327
56C	0.75	6.5	0,16	2,75	1.88	0,625	0,517	0.188	1.41	2.44	3	3.87	0.34	3/8-16	5.875	4.5	6,93	5,79	3,504	8.51	327
143TC	0.75	6.5	0.16	2,75	2,25	0,771	0,771	0.188	1.41	2.75	4	4.87	0.34	3/8-16	5.875	4.5	6,93	5,79	3,504	8.51	329
145TC	1.1	6.5	0,16	2,75	2,25	0,771	0,771	0.188	1.41	2.75	5	5.87	0.34	3/8-16	5.875	4.5	6,93	5,79	3,504	8.51	

4 polig																					TEFC
Bouwrootte Frame size	kW	A	BB	BA	N-W	U	R	S	ES	E	2F	B	H	BF	AJ	AK	P	AB	D	0	C
56C	0.25	6.5	0,16	2,75	1.88	0,625	0,517	0.188	1.41	2.44	3	3.87	0.34	3/8-16	5.875	4.5	6,93	5,79	3,504	8.51	327
56C	0.37	6.5	0,16	2,75	1.88	0,625	0,517	0.188	1.41	2.44	3	3.87	0.34	3/8-16	5.875	4.5	6,93	5,79	3,504	8.51	327
56C	0.55	6.5	0,16	2,75	1.88	0,625	0,517	0.188	1.41	2.44	3	3.87	0.34	3/8-16	5.875	4.5	6,93	5,79	3,504	8.51	327
56C	0.75	6.5	0,16	2,75	1.88	0,625	0,517	0.188	1.41	2.44	3	3.87	0.34	3/8-16	5.875	4.5	6,93	5,79	3,504	8.51	347
143TC	0.75	6.5	0.16	2,75	2,25	0,771	0,771	0.188	1.41	2.75	4	4.87	0.34	3/8-16	5.875	4.5	6,93	5,79	3,504	8.51	349
145TC	1.1	6.5	0,16	2,75	2,25	0,771	0,771	0.188	1.41	2.75	5	5.87	0.34	3/8-16	5.875	4.5	6,93	5,79	3,504	8.51	

3.4.5 56C - 145TC
dubbele condensator condensator TEFC / double coil TEFC

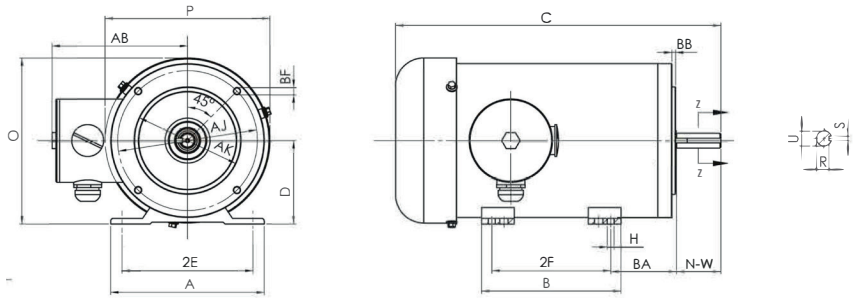

2 polig																					TEFC
Bouwrootte Frame size	kW	A	BB	BA	N-W	U	R	S	ES	E	2F	B	H	BF	AJ	AK	P	AB	D	0	C
56C	1.1	6.5	0.16	2.75	1.88	0.625	0.517	0.188	1.41	2.44	3	3.87	0.34	3/8-16	5.875	4.5	6.93	5.79	3.504	8.07	327
56C	1.5	6.5	0.16	2.75	1.88	0.625	0.517	0.188	1.41	2.44	3	3.87	0.34	3/8-16	5.875	4.5	6.93	5.79	3.504	8.07	347
143TC	0,75	6.5	0.16	2.75	2.25	0.771	0.771	0.188	1.41	2.75	4	4.87	0.34	3/8-16	5.875	4.5	6.93	5.79	3.504	8.07	
145TC	1.1	6.5	0.16	2.75	2.25	0.771	0.771	0.188	1.41	2.75	4	4.87	0.34	3/8-16	5.875	4.5	6.93	5.79	3.504	8.07	329
145TC	1.5	6.5	0.16	2.75	2.25	0.771	0.771	0.188	1.41	2.75	5	5.87	0.34	3/8-16	5.875	4.5	6.93	5.79	3.504	8.07	349

4 polig																					TEFC
Bouwrootte Frame size	kW	A	BB	BA	N-W	U	R	S	ES	E	2F	B	H	BF	AJ	AK	P	AB	D	0	C
56C	1.1	6.5	0.16	2.75	1.88	0.625	0.517	0.188	1.41	2.44	3	3.87	0.34	3/8-16	5.875	4.5	6.93	5.79	3.504	8.07	347
56C	1.5	6.5	0.16	2.75	1.88	0.625	0.517	0.188	1.41	2.44	3	3.87	0.34	3/8-16	5.875	4.5	6.93	5.79	3.504	8.07	371
143TC	0,75	6.5	0.16	2.75	2.25	0.771	0.771	0.188	1.41	2.75	4	4.87	0.34	3/8-16	5.875	4.5	6.93	5.79	3.504	8.07	
145TC	1.1	6.5	0.16	2.75	2.25	0.771	0.771	0.188	1.41	2.75	4	4.87	0.34	3/8-16	5.875	4.5	6.93	5.79	3.504	8.07	349
145TC	1.5	6.5	0.16	2.75	2.25	0.771	0.771	0.188	1.41	2.75	5	5.87	0.34	3/8-16	5.875	4.5	6.93	5.79	3.504	8.07	371

EURN000000_005

3.5 Ringpulsgevers RSB-serie / Ring pulse encoders RSB series

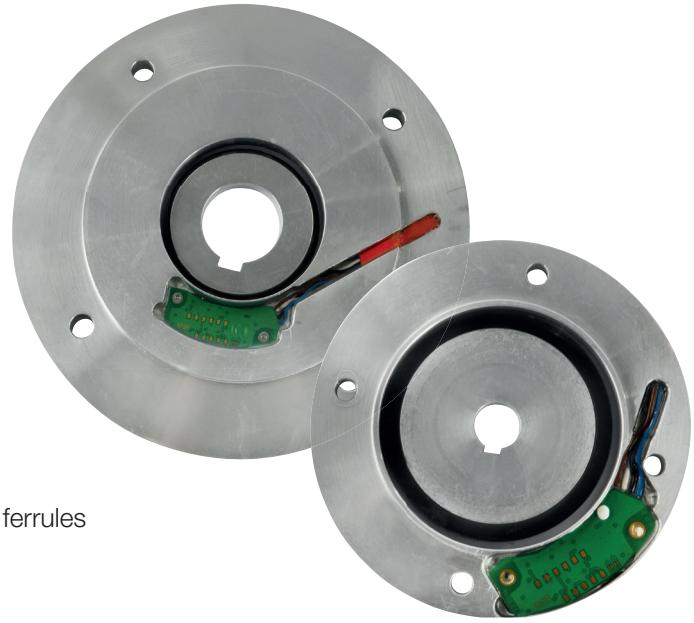

- In Nederland ontwikkeld en geproduceerd
- IEC compatible en maatwerk mogelijk
- 1 tot 1024 pulsen per omwenteling, A en B kanaal
- 10 - 24V DC optioneel 5V DC
- Beschermingsklasse IP69K
- Standaard 0,75m kabel voorzien van adereindhulzen
- Aluminium, RVS

- Developed and manufactured in the Netherlands
- IEC compatible with made to measure available
- 1 to 1024 pulses per revolution, A and B channel
- 10-24 VDC – optionally 5 VDC
- Protection class IP69K
- Fitted with 0,75 meters of cable complete with conductor ferrules
- Aluminium or Stainless steel

3.5.1 Tussenbouw ringpulsgevers volgens IEC

Bij (toerengeregelde) aandrijvingen waar doorlopende informatie over toerental en positie een vereiste is, biedt de tussenbouw ringpulsgever een perfecte oplossing. De ringpuls gever met IEC flens wordt eenvoudig tussen de motor- en reductorflens ingebouwd, zonder dat hiervoor de motor of de reductor moet worden aangepast wat vaak nodig is bij asgemonteerde encoders.

The pulsen worden opgewekt door het langs een statisch opnamepunt laten draaien van een ring met ingegoten magneten. Het opnamepunt is geheel ingekapseld met epoxyhars, en ook de aansluitkabel is ingegoten. In combinatie met de ingegoten magneetring wordt hiermee de kans op storingen nihil.

3.5.1 IEC Flanged ring pulse encoders

In (speed regulated) drives where continuous information on speed and position is demanded, a ring pulse encoder is the perfect solution. The IEC flanged encoders are simply sandwiched between the motor and gearbox flanges, without needing modification of gearbox or motor as often required with shaft mounted encoders.

The pulses are generated by means of rotating a ring with cast in magnets past a stationary pick-up unit. The pick-up unit is completely encapsulated in epoxy resin with a cast in connector cable. In combination with the unitary magnet ring the chance on malfunctions is virtually non-existent.

Specificaties / Specifications

Specificaties / Specifications	
Bouwgrootte / Frame size	**IEC 63 - 160 (optie RVS / option CRES)**
Flens / Flange	B14a en/and B5
Pulsen-omw / Pulses-rev	60, 30, 15, 10, 6, 5, 3, 2, 1 256, 512, 1024
Kanaal / Channel	A en/and B
Voedingsspanning / Supply voltage	10-30V DC (optie/option 5VDC)
Aansluitkabel / Connection cable	0,75m – with/met adereindhulzen / conductor ferrules (optie/option M8, M12)

EURN000000_005

EURN000000_005

Hub van Doorneweg 8 • 2171 KZ Sassenheim – NL • T +31(0)252 228850 • F +31(0)252 228235 • E sales@euronorm.nl • I euronormdrives.com

LEVERINGSPROGRAMMA / SUPPLY PROGRAMME

EURONORM DRIVE SYSTEMS

MOTORREDUCTOREN / GEAR MOTORS

HEAVY DUTY REDUCTOREN / HEAVY DUTY GEAR BOXES

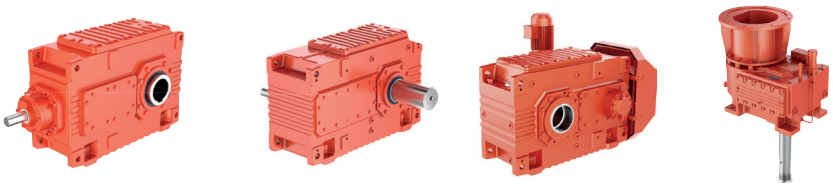

PLANETAIRE REDUCTOREN / PLANETARY GEAR BOXES

RVS AANDRIJVINGEN / CRES DRIVES

WORMWIELREDUCTOREN / WORM GEAR REDCUERS

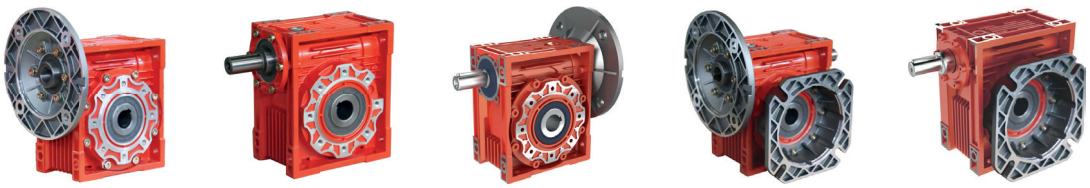

ELEKTROMOTOREN / ELECTRIC MOTORS

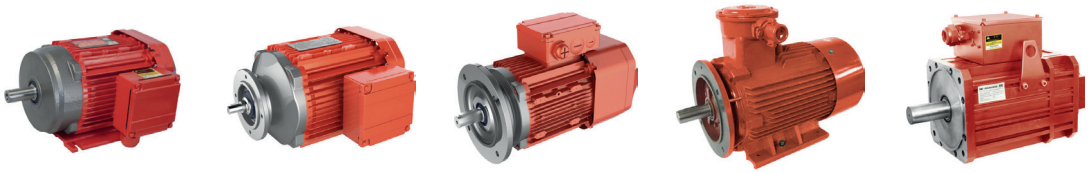

REGELAARS & ENCODERS / VARIABLE-FREQUENCY DRIVE & ENCODERS

DRAAIKRANSEN / SLEWING RINGS / DRIVES

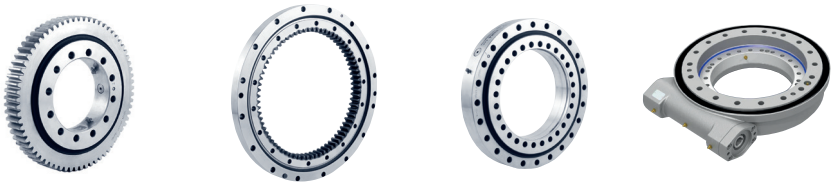

High Quality • Competitive Pricing • On time Deliveries • Expert Knowledge

Hub van Doorneweg 8
2171 KZ Sassenheim – NL

T +31(0)252 228850
F +31(0)252 228235
E info@euronorm.nl

euronormdrives.com